CATERPILLAR®

SENR1864
December 1998

Schematic

D10R Tractor Electrical System

3KR939-UP

© 1998 Caterpillar
All Rights Reserved

Printed in U.S.A.

Component Identifiers (CID) for the Power Train Control (MID 081)	
CID No.	Component
Caterpillar Monitoring System (MID No. 30)	
096	Fuel Level Sensor
110	Engine Coolant Temperature Sensor
177	Torque Converter Oil Temperature Sensor
248	Data Link
263	8 Volt Sensor Power Supply
271	Action Alarm
324	Action Lamp
600	Hydraulic Oil Temperature Sensor
601	Brake Air Pressure Sensor
819	Display Data Link
821	8 Volt Display Power Supply
830	Brake Oil Temperature
Engine Control (MID No. 36)	
001	Cylinder 1 Injection Solenoid
002	Cylinder 2 Injection Solenoid
003	Cylinder 3 Injection Solenoid
004	Cylinder 4 Injection Solenoid
005	Cylinder 5 Injection Solenoid
006	Cylinder 6 Injection Solenoid
007	Cylinder 7 Injection Solenoid
008	Cylinder 8 Injection Solenoid
009	Cylinder 9 Injection Solenoid
010	Cylinder 10 Injection Solenoid
011	Cylinder 11 Injection Solenoid
012	Cylinder 12 Injection Solenoid
042	Injection Actuation Control Valve
091	Throttle Switch
100	Oil Pressure Signal
110	Coolant Temperature
164	Injection Actuation Pressure
168	Battery Voltage
174	Fuel Temperature Signal
175	Oil Temperature Signal
190	Primary Engine Speed Signal
248	CAT Data Link
253	Personality Module
254	Internal ECM
261	Timing Sensor Calibration
262	Analog Sensor Supply
263	Digital Sensor Supply
264	Decelerator Output
266	Crank W/O Inject Inputs
268	Programmable Parameters
273	Turbocharger Compressor Outlet Pressure
274	Atmospheric Pressure Signal
275	Turbocharger Compressor Inlet Pressure
277	Timing Calibration
291	Engine Fan Solenoid
342	Secondary Engine Speed
544	Engine Fan Speed Signal
545	Start Aid Injection Relay
562	Communication with Caterpillar Monitoring System
599	Engine Fan Valve
Power Train Electronic Control (MID No. 113)	
070	Parking Brake Switch
075	Steering System Oil Temperature Switch
168	Electrical System
177	Transmission Oil Temperature Sensor
190	Engine Speed Sensor
248	CAT Data Link
254	Electronic Control Module
269	Sensor Power Supply
298	Service Brake Switch
299	Transmission Direction Lever Position Sensor
368	Autoshift Switch
468	Service Brake Pedal Position Sensor
573	Inching Pedal Position Sensor
618	Parking Brake Switch - Brake Backup Pole
621	Downshift Switch
622	Upshift Switch
623	Direction Switch
650	Harness Code
671	Transmission Output Speed 1 Sensor
672	Torque Converter Output Speed Sensor
673	Transmission Output Speed 2 Sensor
674	Transmission Intermediate Speed 1 Sensor
675	Transmission Intermediate Speed 2 Sensor
676	Left Steering Lever Position Sensor
677	Right Steering Lever Position Sensor
681	Parking Brake Solenoid
689	Left Steering Brake Solenoid
690	Right Steering Brake Solenoid
691	Reverse Clutch Solenoid Valve 1
692	Forward Clutch Solenoid Valve 2
693	Speed 3 Clutch Solenoid Valve 3
694	Speed 2 Clutch Solenoid Valve 4
695	Speed 1 Clutch Solenoid Valve 5
697	Priority Valve Solenoid
698	Left Steering Clutch Solenoid Valve
699	Right Steering Clutch Solenoid Valve
722	Secondary Brake Solenoid Valve

The CID is a diagnostic code that indicates which component is faulty. The MID is a diagnostic code that indicates which electronic control module diagnosed the fault.

Wire Description					
Wire Number	Wire Color	Description	Wire Number	Wire Color	Description
Power Distribution Circuits			**Lighting Circuits Continued**		
101	RD	Bat (+)	659	YL	Flood Lamp - Side
102	RD	Hd Lmp	610	OR	Head Lamp Basic
105	RD	Key Sw	630	GY	Flood Lamp Rear
108	BU	Aux Ckt	633	BU	Attach Lighting Ckt
109	RD	Alt Output (+) Term	661	GN	Tachometer Lamp
112	PU	Main Power Rly Output	662	YL	Speedometer Lamp
113	OR	VIMS B+ Switched	663	GY	Gage Lamps
114	RD	Warning Horn (Forward)	**Control Circuits**		
116	RD	Aux Ckt	709	OR	Sensor Power Supply
124	GN	A/C	751	GN	XMSN Shift Sol No. 1 Or 3
125	OR	Aux Ckt	752	YL	XMSN Shift Sol No. 2
130	GN	Aux Ckt	754	BU	XMSN Shift Sol No. 3 Or 1
131	RD	Aux Ckt	755	OR	XMSN Shift Sol No. 4 Or 5
133	OR	Aux Ckt	779	WH	Coupler Engage Sol
134	YL	Aux Ckt	780	PU	Coupler Disengage Sol
135	RD	Aux Ckt	A700	OR	Digital Sensor Power(+8V)
140	BU	Aux Ckt	A701	GY	Injector #1
150	RD	Bat (+)	A702	PU	Injector #2
158	BR	Aux Ckt	A703	BR	Injector #3
174	PK	Aux Ckt	A704	GN	Injector #4
176	YL	Aux Ckt	A705	YL	Injector #5
177	RD	Main Bttr	A706	GY	Injector #6
184	BU	Aux Ckt	A707	PU	Injector #7
186	RD	Aux Ckt	A708	BR	Injector #8
197	GN	Aux Ckt	A709	OR	Injector #9
198	RD	Aux Ckt	A710	GY	Injector #10
Ground Circuits			A711	PU	Injector #11
200	BK	Main Chassis	A712	BR	Injector #12
201	BK	Operator Monitor Return	A746	PK	Turbo Outlet Pressure
202	BK	XMSN Ctrl	A747	GY	Atmospheric Pressure
203	BK	Chassis Diagnostic Code	A751	YL	After Cooler Temp
207	BK	Starter Diagnostic	E707	GN	VIMS Display +V
229	BK	Bat (-)	E708	PK	VIMS Display Clock
270	BK	CMS Ident Code 0	E735	PU	Smart Emx/Tack/Serv Mtr/Odometer Select
271	BK	CMS Ident Code 1	E793	BU	ATA Data Link -
272	BK	CMS Ident Code 2	E794	YL	ATA Data Link +
273	BK	CMS Ident Code 3	E795	YL	Crankcase Press
274	BK	CMS Ident Code 4	E796	GN	Oil Press (Unfiltered)
275	BK	CMS Ident Code 5	E799	BR	PWM #1 And #2 Return
276	BK	XMSN Ctrl Ident Code 0	F700	BU	PWM #1 Out (3.5A)
277	BK	XMSN Ctrl Ident Code 1	F701	BU	PWM #2 Out (3.5A)
278	BK	XMSN Ctrl Ident Code 2	F702	GN	Throttle
279	BK	XMSN Ctrl Ident Code 3	F703	GY	Lh Turbine Inlet Exh Temp
280	BK	XMSN Ctrl Ident Code 4	F704	OR	Rh Turbine Inlet Exh Temp
290	BK	CMS Service	F705	PK	Dout 6
291	BK	CMS Clear	F706	PU	Dout 5
A234	BK	J1939 Shield Gnd	F707	WH	Start Aid Current Level Relay
Basic Machine Circuits			F709	PU	Dout 2
301	BU	Starter No. 1 Sol	F710	BR	Start Aid On Relay
302	OR	Starter No. 1 Resistor To Diagnostic	F713	OR	Left Turbo Inlet Press
304	WH	Starter Relay No. 1 Output	F714	PK	Right Turbo Inlet Press
306	GN	Starter Relay Coil To Neut Start SW Or Key SW	F715	PU	Shutdown (No)
307	OR	Key SW To VIMS Sensor Module	F716	WH	Shutdown (Nc)
308	YL	Main Power Relay Coil	F717	YL	SW 4
310	PU	Start Aid Switch To Start Aid Sol	F718	BU	SW 5
312	PK	Starter No. 2 To Resistor	F719	BR	SW 6/1
313	GY	Starter No. 2 Resistor To Diagnostic	F720	GN	SW 6/3
314	PU	Starter Relay No. 2 Output	F721	GY	SW 8/4
321	BR	Backup Alarm Lamp Travel Alarm	F722	OR	SW 10/5
322	GY	Warning Horn Forward	F723	PK	TDC Probe +
337	WH	Prelube Pushbutton Switch	F724	PU	TDC Probe -
A311	BU	Prelube Pump to Relay	F725	WH	Fuel Press
Monitoring Circuits			F726	YL	Injector Common 1&3
403	GN	Alternator (R) Term	F727	BU	Injector Common 2&4
405	GY	Opr Mon Oil Press Low Setting	F728	BR	Injector Common 5&7
410	WH	Opr Mon Fault Alarm	F729	GN	Injector Common 6&8
411	PK	Opr Mon Master	F730	GY	Injector Common 9&11
412	BU	Opr Mon Cool Flow	F731	OR	Injector Common 10&12
419	YL	Opr Mon Parking Brake	F732	PK	Backup Camshaft Spd/Tmg
420	OR	Opr Mon Fuel Filter/Low Accum Press	F737	YL	Analog Sensor Input 6
426	BR	Opr Mon Power Train Oil Filter	F780	PK	Parking Brake SW
441	OR	Eng Coolant Temp Gauge	F781	BR	Downshift SW
442	GY	Hyd System Temp Gauge	F782	OR	Reverse SW
443	YL	Power Train Temp Gauge	F783	GN	Upshift SW
447	PK	Fuel Level Gauge	F784	YL	Downshift SW
450	YL	Tach Sender (+)	F785	WH	Upshift SW
499	GY	Opr Mon Implement Oil Filter	F786	GY	Reverse SW
A447	PK	Prelube Press SW To Prelube Timer	F788	PU	Left Steer Clutch
C413	YL	VIMS Display Data	F789	YL	Right Steer Clutch
C414	BU	VIMS Display Load	F790	BR	Service Brake Pedal
Accessory Circuits			F791	BU	Right Brake Sol
500	BR	Wiper - Front (Park)	F792	WH	Left Brake Sol
501	GN	Wiper - Front (Low)	F797	BU	Display Sensor +V
502	OR	Wiper - Front (Hi)	G730	PK	EPTC II - Park Brake Sol
503	BR	Wiper - Rear (Park)	G731	GY	EPTC II - Secondary Service Brake Sol
504	YL	Wiper - Rear (Low)	828	WH	Hydrid Left Steer Pedal Sensor
506	PU	Washer - Front	830	OR	Right Steer Pedal Sensor
507	WH	Washer - Rear	851	WH	Hydrid Speed And Direction Sensor
508	PU	Radio Speaker Left	852	BR	VIMS Start Mod Right (-) Port/CAT Data Link (-)
509	WH	Radio Speaker Left (Common)	893	GN	VIMS Start Mod Right (+) Port/CAT Data Link (+)
511	BR	Radio Speaker Right	F842	BU	AIM Post Heat
512	GN	Radio Speaker Right (Common)	F843	YL	Inching Pedal
513	OR	A/C Compressor/Refrigerant Pressure Switch	F846	PU	LED Driver 1
515	GY	Blower Motor (Hi)	F847	YL	ECB SW IP1
516	GN	Blower Motor (Medium)	F848	OR	ECB SW IP2
517	BU	Blower Motor (Low)	F849	WH	ECB SW IP3
519	PK	Thermostat To Refrigerant Press. SW	F850	PK	ECB SW IP4
520	WH	Opr A/C SW To Thermostat Fuse	G848	GN	LED Driver 2
521	YL	A/C SW To Refrigerant SW	900	PU	XMSN Shift Sol No. 6 or 4
522	WH	A/C Clutch To Thermostat SW	973	BR	CST Autoshift - Auto/Manual Return SW 1
523	BR	Wiper - Left (Park)	975	WH	CST Autoshift- Sol Return
524	BU	Wiper - Left (Low)	993	BR	Analog Sensor Common
525	GY	Wiper - Left (Hi)	994	GY	Oil Pressure (Filtered)
526	YL	Wiper - Right (Park)	995	BU	Coolant Temperature
527	GN	Wiper - Right (Low)	996	GN	Engine Speed/Timing Sensor Power
528	PK	Wiper - Right (Hi)	997	OR	Analog Sensor Power (+ 5V)
529	WH	Washer Left	998	BR	Digital Sensor Return
530	OR	Washer Right	999	WH	Primary Camshaft Speed/Timing
553	YL	Pitch Sol To Trigger SW - Dual Tilt	E900	WH	ECPC Trans Output SPD +
554	PK	Momentary SW To Single Tilt Sol - Dual Tilt	E901	GN	ECPC Trans Output SPD -
567	WH	A/C SW Jumper	E902	PU	ECPC Trans Intermediate SPD +
592	BU	DC/DC Converter Outlet	E903	YL	ECPC Trans Intermediate SPD -
593	GN	Condenser Fan Relay To Motors	E904	BR	ECPC Trans Intermediate SPD Q +
A513	PK	DC/DC Converter Memory Output	E905	BU	ECPC Trans Intermediate SPD Q -
A523	PU	Temp Potentiometer Pos.1	E906	OR	ECPC Trans SPD Output Q +
A524	BR	Temp Potentiometer Pos.2	E907	GY	ECPC Trans SPD Output Q -
A525	GN	Temp Potentiometer Pos.3	E908	BR	ECPC Trans Input SPD +
Lighting Circuits			E909	WH	ECPC Trans Input SPD -
600	BR	Dash Lamp Basic	K977	PK	ECPC Trans Oil Temp Sensor
608	GN	Flood Lamp - Rear	K978	BU	ECPC Pump Sol

Failure Mode Identifiers (FMI)	
FMI No.	Failure Description
0	Data valid but above normal operational range.
1	Data valid but below normal operational range.
2	Data erratic, intermittent, or incorrect.
3	Voltage above normal or shorted high.
4	Voltage below normal or shorted low.
5	Current below normal or open circuit.
6	Current above normal or grounded circuit.
7	Mechanical system not responding properly.
8	Abnormal frequency, pulse width, or period.
9	Abnormal update.
10	Abnormal rate of change.
11	Failure mode not identifiable.
12	Bad device or component.
13	Out of calibration.
14	Parameter failures.
15	Parameter failures.
16	Parameter not available.
17	Module not responding.
18	Sensor supply fault.
19	Condition not met.
20	Parameter failures.

The FMI is a diagnostic code that indicates what type of failure has occurred.

Connector Location[1]					
Connector Number	Schematic Location	Machine Location	Connector Number	Schematic Location	Machine Location
CONN 1 Accessory Circuit	A-15	45	CONN 31	G-6	11
CONN 2	E-15	B	CONN 32	F-6	11
CONN 3	F-15	B	CONN 33	F-6	11
CONN 4	G-15	24	CONN 34	F-6	11
CONN 5	I-15	63	CONN 35	F-6	11
CONN 6	I-14	15	CONN 36	E-6	11
CONN 7	G-14	24	CONN 37	C-6	11
CONN 8	G-14	50	CONN 38	C-5	11
CONN 9	G-14	C	CONN 39	E-5	11
CONN 10	B-13	B	CONN 40	H-5	68
CONN 11	C-13	B	CONN 41 Starting/Charging Diagnostic	F-4	E
CONN 12	C-13	B	CONN 42	D-4	60
CONN 13	H-13	64	CONN 43	C-4	35
CONN 14	I-14	63	CONN 44	B-4	35
CONN 15	A-12	69	CONN 45	A-4	A
CONN 16	A-12	69	CONN 46	A-4	63
CONN 17	A-11	B	CONN 47	A-4	63
CONN 18	H-10	A	CONN 48	C-3	14
CONN 19	G-10	A	CONN 49	F-3	60
CONN 20 Monitor/Calibration Service	G-10	E	CONN 50	F-3	60
CONN 21 Service Tool	F-10	E	CONN 51	F-3	60
CONN 22 Code Plug	C-10	A	CONN 52	F-3	60
CONN 23	A-9	E	CONN 53	F-3	60
CONN 24	G-8	A	CONN 54	G-3	60
CONN 25	G-8	A	CONN 55	H-3	49
CONN 26	F-8	A	CONN 56	I-2	65
CONN 27	C-8	A	CONN 57	G-2	67
CONN 28	A-8	A	CONN 58	B-2	65
CONN 29	A-7	A	CONN 59	G-1	13
CONN 30	G-7	A	CONN 60 Power Outlet Socket	C-13	B

[1]The connectors shown in this chart are harness to harness and special use connectors. Connectors which join a harness to a component are generally located at or near the component. See the component location chart.

Machine Codes	
Sales Model	Machine Code
D10R	27

Component Location					
Component	Schematic Location	Machine Location	Component	Schematic Location	Machine Location
Actuator - Water Valve	H-13	1	Sensor - Backup Speed/Timing	F-2	39
Alarm - Action	C-13	2	Sensor - Brake Position	H-8	41
Alarm - Backup	H-15	3	Sensor - Coolant Temperature	F-2	36
Alternator	I-2	4	Sensor - Decelerator Pedal	B-9	43
Batteries	I-8	5	Sensor - Direction	G-12	44
Batteries (Attachment)	A-2	6	Sensor - Engine Oil Pressure	E-2	40
Breaker - Alternator	F-10	E	Sensor - Engine Oil Temperature	E-2	40
Breaker - Blower	E-9	E	Sensor - Fuel Temperature	F-2	42
Breaker - Power Train ECB	E-9	E	Sensor - Hydraulic Oil Temperature	B-14	45
Breaker - Engine	F-10	E	Sensor - Left Steer Lever Position	F-12	44
Breaker - Front Floods	E-10	E	Sensor - Odometer Speed	A-12	46
Breaker - Key	F-10	E	Sensor - Power Train Oil Temperature	B-6	47
Breaker - Main	F-10	E	Sensor - Primary Speed/Timing	F-2	42
Breaker - Attachment	E-9	E	Sensor - Rail Pressure	F-2	14
Breaker - Power Outlet	F-10	E	Sensor - Right Steer Lever Position	F-12	44
Breaker - Remote Condenser	G-9	E	Sensor - Fan Speed	H-2	49
Bus Bar	I-5	8	Sensor - Steering Oil Temperature	C-15	50
Bus Bar	A-2	A	Sensor - Timing Calibration	C-4	51
Caterpillar Monitoring System	B-10	C	Sensor - Turbo Inlet Pressure	G-2	52
Condenser - Remote Mounted A/C	A-13	E	Sensor - Turbo Outlet Pressure	E-2	39
Control - Heater Temperature	D-13	27	Sensor - Fuel Level	H-15	54
Control - Water Valve	I-13	12	Solenoid - A/C Clutch	H-2	12
Converter - 24 Volt To 12 Volt	B-13	26	Solenoid - Demand Fan	H-2	49
Diode - A/C	I-2	14	Solenoid - Dual Tilt	H-1	55
Diodes - Dual Tilt	H-1	A	Solenoid - First Gear Clutch	H-14	56
Diodes - Ripper Pin Puller	A-15	58	Solenoid - Forward Clutch	H-14	56
Heui ECM	D-2	18	Solenoid - Left Steer Brake	C-15	50
Gauge - Cluster	C-11	18	Solenoid - Left Steer Clutch	C-15	50
Ground - Beam to Fender	A-6	21	Solenoid - Park Brake Dump	C-15	50
Ground - Engine	C-3	22	Solenoid - Prelube Timer	H-5	57
Ground - Engine Strap	I-3	23	Solenoid - Reverse Clutch	H-14	56
Ground - Frame LH	H-6	24	Solenoid - Right Steer Brake	C-15	50
Ground - Platform	B-8	24	Solenoid - Right Steer Clutch	C-15	50
Ground - Cab	H-10	26	Solenoid - Ripper Pin Puller	A-15	58
Ground - Frame to Beam	H-5	26	Solenoid - Second Gear Clutch	G-14	56
Ground - Fuel Tank to Fender	A-15	A	Solenoid - Service Brake Dump	C-15	50
Ground - Engine CLD to Frame CLD	B-3	27	Solenoid - Start Aid	A-3	59
Ground - Module & Fender to Beam	H-5	15	Solenoid - Third Gear Clutch	G-14	56
Ground - Rear Fender	A-15	28	Solenoid - Injector	F-2	60
Ground - Rear Fender	I-15	29	Switch - A/C On	C-14	C
Horn - Forward (High Tone)	G-1	30	Switch - Accessory	B-8	A
Horn - Forward (Low Tone)	G-1	29	Switch - A/C Pressure	H-2	12
Lamp - Master Action	C-10	29	Switch - Blower	D-14	C
Lamp - Panel Assembly	H-14	4	Switch - Console Raise/Lower	E-12	44
Lamp - Rear Action	B-13	29	Switch - Coolant Flow	C-12	36
Motor - Blower	I-14	33	Switch - Dimmer	D-10	41
Motor - Console Raise/Lower	E-11	34	Switch - Disconnect	I-6	37
Motor - Front Washer Pump	I-15	34	Switch - Downshift	F-11	44
Motor - Front Wiper	H-8	35	Switch - Power Train Filter Temperature	H-15	19
Motor - Left Washer Pump	I-15	E	Switch - Horn	B-13	B
Motor - Left Wiper	H-8	C	Switch - Front Wiper	H-11	D
Motor - Rear Washer Pump	I-15	37	Switch - Front Floods	D-9	A
Motor - Rear Wiper	G-11	9	Switch - Key Start	C-9	A
Motor - Right Washer Pump	I-15	E	Switch - Left Wiper	H-11	D
Motor - Right Wiper	H-8	E	Switch - Operator	B-9	A
Motor - Front Defrost Fan	D-9	69	Switch - Parking Brake	E-11	44
Motor - Rear Defrost Fan	D-14	69	Switch - Pitch Control	C-13	53
Motor - Starter	I-3	34	Switch - Power Train Filter	H-15	19
Motor - Starter (Attachment Prelube)	I-3	35	Switch - Rear Flood	C-9	A
Motor - Starter (Attachment)	B-3	39	Switch - Rear Wiper	H-12	D
Panel Backlight	C-10	A	Switch - Reverse	F-12	44
Power Post	F-10	E	Switch - Right Wiper	H-11	D
Power Train ECB	F-13	C	Switch - Ripper Pin Puller	B-13	27
Receptacle - Auxiliary Start	H-5	37	Switch - Brake Position	C-8	41
Relay - A/C Interface	A-3	9	Switch - Side Flood	C-9	A
Relay - Main	F-10	E	Switches - Single/Dual Tilt	C-13	53
Relays - Start	E-11	E	Switch - Start Aid	B-9	A
Relay - Start Aid	A-4	38	Switch - Temperature Control	D-13	1
Resistor - Blower Motor Speed	I-14	1	Switch - Throttle	B-13	B
Resistor - Starter Motor	I-4	34	Switch - Upshift	F-11	44
Resistor - Starter Motor (Attachment)	B-4	35	Tachometer Cluster	D-11	A
Sensor - Atmospheric Pressure	E-2	39	Thermostat Evap	I-13	1

Machine locations are repeated for components located close together
A = Located in left dash panel.
B = Located in center dash panel.
C = Located in right dash panel.
D = Located in cab floor.

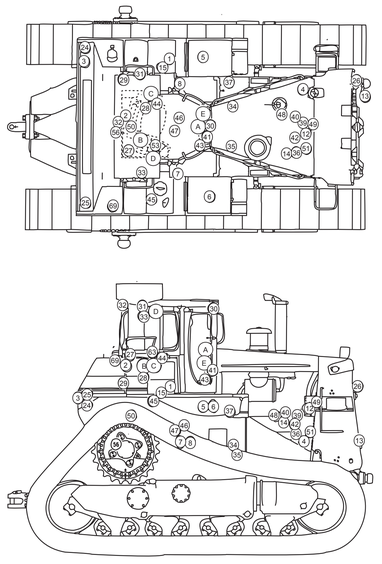

Machine Harness Connector And Component Locations

Resistor, Sender, and Solenoid Specifications		
Part No.	Component	Resistance (Ohms)[1]
3E-7842	Resistors - 1.2	150 ± 7.5
9G-1950	Resistor - Blower Motor	Overall 2.0 ± .1; Tap 1.0 ± .05
3E-3748	Solenoid - Transmission (Rev, Fwd, 1st, 2nd, 3rd Gear)	8.5
3E-6333	Solenoid - Start Aid	6.0
3E-8575	Solenoid - Ripper Pin Puller	24.9
3E-0205	Solenoid - Dual Tilt	24.9
102-0347	Solenoid - A/C Clutch	14.4 ± 0.6
121-4030	Solenoids Left Brake Left Clutch Right Brake Right Clutch	7.75 ± 1.0
124-3497	Solenoid - Demand Fan	2.8 ± 0.3
130-9876	Solenoids - Injector	2.1 ± 0.2
133-2250	Solenoids Park Brake Dump Service Brake Dump	41.9

[1] At room temperature.

Off Machine Switch Specification				
Part No.	Function	Actuate	Deactuate	Contact Position
3E-5465	Evaporation Thermostat	26 Nm to .43 Nm (.19 lb ft to .32 lb ft)	--	Normally Closed
3E-6428	Coolant Flow	362 ± 29 mN (45.6 mm ID point) (1.3 ± .1 oz; 1.8 in ID point)	303 mN MIN (1.1 oz MIN)	Normally Open
3E-9350	Power Train Filter Temp	43° to 52° ± 3° C (109° to 125° ± 5° F)	--	Normally Closed
9X-7781	Power Train Filter Pressure	210 ± 70 kPa (30 ± 10 psi)	--	Normally Open
105-9152	Prelube Oil Pressure	30 kPa ± 7 kPa (4.34 psi ± 1 psi)	--	Normally Closed
114-5333	AC Pressure	275 to 1750 kpa* (40 to 255 psi)	--	Normally † Open

* A hysteresis band exists: with increasing pressure the closed condition can be maintained up to 2800 kpa (405 psi), with decreasing pressure the closed condition can be maintained down to 170 kpa (25 psi).
† Contact position at the contacts of the harness connector.

Monitoring System Mode	
Mode Of Operation	Mode Number
Normal	0
Harness Code	1
Numeric Readout	2
Service	3
Tattletale	4
Units	5
Steering Braking Calibration	6
Transmission Calibration	7
Component Data Display	8
Charging System Display	9

Related Electrical Service Manuals	
Title	Form Number
Alternator: 9X-7803	SENR7608
Power Train Electronic Control System	RENR2522
Starter: 6V-0889	SENR3860
Vital Information Management System (VIMS)	SENR6059

Electrical Schematic Symbols And Definitions

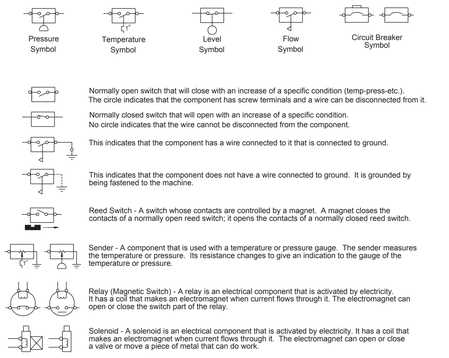

Harness And Wire Symbols

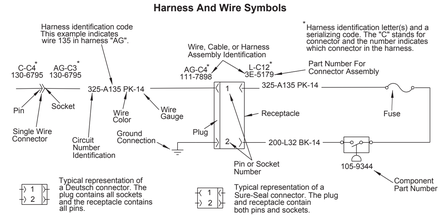

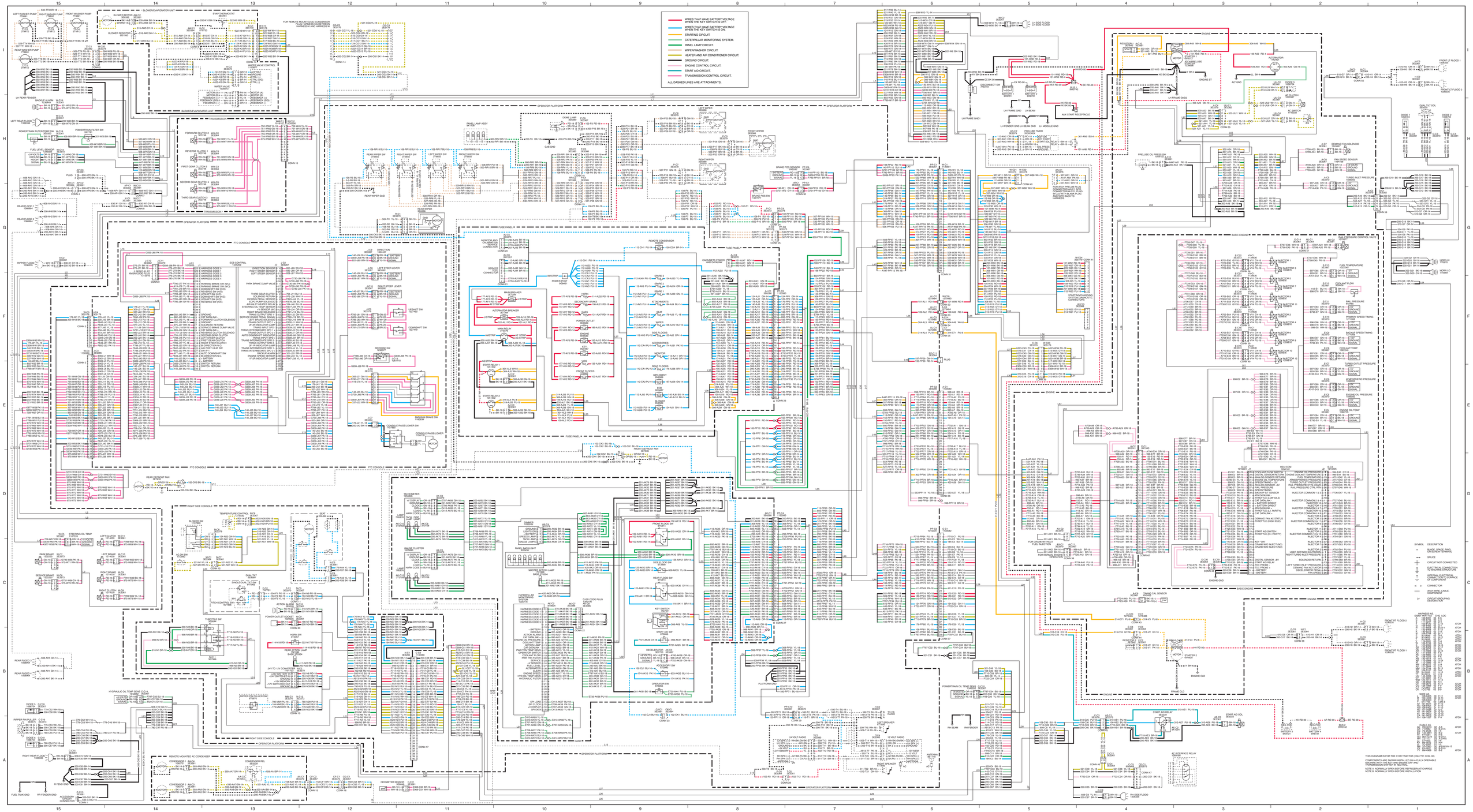
WIRES THAT HAVE BATTERY VOLTAGE WHEN THE KEY SWITCH IS OFF.
WIRES THAT HAVE BATTERY VOLTAGE WHEN THE KEY SWITCH IS ON.
STARTING CIRCUIT.
CATERPILLAR MONITORING SYSTEM.
PANEL LAMP CIRCUIT.
WIPER/WASHER CIRCUIT.
HEATER AND AIR CONDITIONER CIRCUIT.
GROUND CIRCUIT.
ENGINE CONTROL CIRCUIT.
START AID CIRCUIT.
TRANSMISSION CONTROL CIRCUIT.
ALL DASHED LINES ARE ATTACHMENTS.
OPERATOR PLATFORM
BLOWER/EVAPORATOR UNIT
TRANSMISSION
TTC CONSOLE
EOS CONTROL HOUSE
FUSE PANEL
REMOTE CONDENSER
FTC CONSOLE
RIGHT SIDE CONSOLE
CASH
ENGINE
BASIC ENGINE
REMOTE MOUNTED AC CONDENSER
THIS DIAGRAM IS FOR THE 518R TRACTOR (158-7711 CHG.05)
COMPONENTS ARE SHOWN INSTALLED IN A FULLY OPERABLE CONFIGURATION WITH THE ENGINE OFF AND TRANSMISSION SHIFTER IN NEUTRAL
NOTE A NORMALLY OPEN BEFORE REFRIGERANT CHARGE
NOTE B NORMALLY OPEN BEFORE INSTALLATION