Component Identifiers (CID[1]) Module Identifier (MID[2])

CID No.	Component
	Engine Control MID 36
1	Cylinder 1 Injector Solenoid
2	Cylinder 2 Injector Solenoid
3	Cylinder 3 Injector Solenoid
4	Cylinder 4 Injector Solenoid
5	Cylinder 5 Injector Solenoid
6	Cylinder 6 Injector Solenoid
7	Cylinder 7 Injector Solenoid
8	Cylinder 8 Injector Solenoid
91	Throttle Switch
100	Filtered Oil Pressure Signal
101	Crankcase Pressure Signal
168	Battery Voltage
190	Engine Speed Signal
248	Engine Speed Signal
253	Personality Module Mismatch
254	Internal ECM Problem
261	Timing Sensor Calibration
262	Analog Supply
263	Digital Supply
264	Decelerator Throttle Signal
266	Crank Without Inject Inputs
268	Check Programmable Parameters
273	Turbo Compressor Outlet Pressure
274	Atmospheric Pressure Signal
275	Right Turbo Compressor Inlet Pressure Signal
276	Left Turbo Compressor Inlet Pressure Signal
277	Timing Calibration Signal
290	Engine Fan Pump Pressure Signal
291	Engine Cooling Fan control Valve
545	Start Aid Relay
546	Start Hold Relay
562	Caterpillar Monitoring System Communications
800	VIDS Communications
827	Left Exhaust Temperature
828	Right Exhaust Temperature
	Power Train Control MID 113
70	Parking Brake Switch
75	Steering System Oil Temp Switch
168	Battery Voltage
177	Torque Converter Oil Temp Sensor
190	Primary Engine Speed Sensor
248	CAT Data Link
254	Electronic Control Module
269	Sensor Power Supply
298	Service Brake Switch
299	Trans Direction Lever Position Sensor
368	Autoshift Switch
468	Service Brake Pedal Position Sensor
573	Inching Pedal Position Sensor
618	Parking Brake Switch
621	Downshift Switch
622	Upshift Switch
623	Direction Switch
650	Harness Code
671	Transmission Output Speed 1 Sensor
672	Torque Converter Output Speed Sensor
673	Transmission Output Speed 2 Sensor
674	Transmission Intermediate Speed 1 Sensor
675	Transmission Intermediate Speed 2 Sensor
676	Left Steering Lever Position Sensor
677	Right Steering Brake Solenoid
681	Parking Brake Solenoid
689	Left Steering Brake Solenoid
690	Right Steering Brake Solenoid
691	Reverse Clutch Solenoid Valve 1
692	Forward Clutch Solenoid Valve 2
693	Speed 3 Clutch Solenoid Valve 3
694	Speed 2 Clutch Solenoid Valve 4
695	Speed 1 Clutch Solenoid Valve 5
697	Priority Valve Solenoid
698	Left Steering Clutch Solenoid Valve
699	Right Steering Clutch Solenoid Valve
722	Secondary Brake Solenoid Valve
	Caterpillar Monitoring System MID 30
96	Fuel Level Sensor
110	Engine Coolant Temp Sensor
177	Torque Converter Oil Temp Sensor
248	CAT Data Link
263	Sensor Power Supply (8V)
271	Action Alarm
324	Action Lamp
600	Hydraulic Oil Temp Sensor
601	Brake Air Pressure Sensor
819	Display Data Link
821	Display Power Supply (9V)
830	Brake Oil Temp Sensor

[1] The CID is a diagnostic code that indicates which component is faulty.

[2] The MID is a diagnostic code that indicates which electroniccontrol module diagnosed the fault

Component Location

Component	Schematic Location	Machine Location	Component	Schematic Location	Machine Location
Alarm - Action	C-12	1	Sensor - PTO Temp	D-5	31
Alarm - Backup	I-12	2	Sensor - Speed Timing	B-3	21
Alternator	H-2	3	Sensor - Steer Lever (Left)	I-6	C
Arc Suppressor (2) (Dual/Tilt Sol)	G-1	4	Sensor - Steer Lever (Right)	I-6	C
Arc Suppressor (AC Clutch)	F-3	5	Sensor - Steering Oil Temp	G-11	32
Arc Suppressor - (2) (Ripper Pin Sol)	F-11	6	Sensor - TDC Cal	C-3	33
Backlight - Washer	B-10	7	Sensor - Turbo (Left Inlet Press)	F-3	27
Battery	A-3, I-4	8,9	Sensor - Turbo (Right Inlet Press)	E-3	28
Breaker - Alternator (105A)	F-11	E	Sensor - Turbo Outlet Pressure	C-3	29
Breaker - Blower (15A)	E-9	E	Sensor - Ultrasonic Fuel Level	A-12	30
Breaker - ECB (10A)	E-9	E	Socket - Power Outlet	C-12	1
Breaker - Engine (15A)	F-10	E	Solenoid - AC Clutch	F-3	5
Breaker - Floods (Front 15A)	E-10	E	Solenoid - Clutch 1 (Reverse)	G-12	32
Breaker - Implement (15A)	E-9	E	Solenoid - Clutch 2 (Forward)	H-12	32
Breaker - Key (10A)	E-10	E	Solenoid - Clutch 3 (Third Gear)	G-12	32
Breaker - Main (105A)	F-11	E	Solenoid - Clutch 4 (Second Gear)	G-12	32
Breaker - Power Outlet (15A)	F-10	E	Solenoid - Clutch 5 (First Gear)	G-12	32
Caterpillar Monitoring System	C-10	A	Solenoid - Dual/Tilt	G-1	4
Control - ECB	I-7	10	Solenoid - Fan Valve	B-5	45
Control - Enigne	E-3	11	Solenoid - Left Steer Brake	G-10	32
Control - Water Valve	I-10	12	Solenoid - Left Steer Clutch	H-10	33
Converter - 24V to 12V	E-12	13	Solenoid - Park Brake Dump	G-10	32
Dimmer	D-10	A	Solenoid - Retarder	B-5	34
Fuse - VIDS (1 0A)	E-10	E	Solenoid - Right Steer Brake	G-10	32
Fuses	F-10, E-9, F-9	E	Solenoid - Ripper Pin	G-11	6
Gauge Cluster	D-1 1	A	Solenoid - Serv Brake Dump	G-10	32
Horn - Hi/Low	F-1	14	Solenoid - Start Aid	G-3	20
Injectors (8)	E-1	F	Starter 1 - (Prelube)	I-2	21
Lamp - Engine Service	B-8	A	Starter 2	H-2	21
Lamp - Exhaust Temp	B-8	A	Switch - AC On	D-11	B
Lamp - Master Action	D-10	A	Switch - AC Pressure	F-4	5
Lamp - Master Action (Rear)	D-12	13	Switch - Accessory	B-9	A
Motor - Blower 2	I-11	12	Switch - Blower	D-11	B
Motor - Console Raise/Lower	H-5	C	Switch - Brake	G-7	23
Motor - Washer (Front, Rear, Left, Right)	I-12	1 5	Switch - Console Raise/Lower	H-6	C
Motor - Wiper (Front)	A-5	16	Switch - Coolant Flow	B-3	11
Motor - Wiper (Left, Right)	A-6	17, 18	Switch - Disconnect	I-5	20
Motor - Wiper (Rear)	B-10	19	Switch - Downshift	I-6	C
Panel Light	D-10	A	Switch - Flood (Front)	D-9	A
Power Post	F-10	E	Switch - Flood (Rear)	C-9	A
Prelube Timer	G-5	20	Switch - Flood (Side)	C-9	A
Relay - Main	E-11	E	Switch - Fuel Filter	B-3	43
Relay - Start 1	E-11	E	Switch - Horn	C-12	B
Relay - Start 2	E-11	E	Switch - Key	C-9	A
Relay - Start Aid Hold	G-4	27	Switch - Operator	B-9	A
Relay - Start Aid Start	G-4	27	Switch - Park Brake	H-5	C
Resistor - Blower 2	I-11	12	Switch - Pitch Control	E-1 1	B
Resistor - Start Aid	G-4	20	Switch - Prelube Oil Pressure	G-5	24
Resistor - Starter 1	I-2	21	Switch - PTO Filter 1	I-8	35
Resistor - Starter 2	H-2	21	Switch - PTO Filter 2	I-8	35
Seat	E-12	1	Switch - PTO Temp	D-5	31
Sensor - Atm Pressure	C-3	22	Switch - Reverse	H-6	C
Sensor - Brake	G-7	23	Switch - Ripper Pin Puller	C-12	B
Sensor - Coolant Temp	C-3	24	Switch - Single/Dual Tilt	E-1 1	B
Sensor - Crankcase Pressure	C-3	25	Switch - Start Aid	C-9	A
Sensor - Decelerator Pedal	B-9	23	Switch - Thermostat	I-10	12
Sensor - Direction	I-6	C	Switch - Throttle	C-11	B
Sensor - Engine Oil Pressure	B-3	26	Switch - Upshift	I-6	C
Sensor - Exhaust Temperature (Left)	F-3	27	Switch - Wiper (Front, Rear, Left, Right)	A-10	7
Sensor - Exhaust Temperature (Right)	E-3	28	Tachometer	D-11	A
Sensor - Fan Pressure	B5	29	Temperature Control	D-11	B
Sensor - Hydraulic Oil Temp	A-12	30	Water Valve	H-10	12
Sensor - Odometer	A-6	31			

A = Operator Compartment - Dash

B = Operator Compartment - Right Console

C = Operator Compartment - Left Console

D = Components - Behind Operator Compartment

E = Components - Low and to the Left of the Dash (Fuse Panel)

F = Components - Located at each Cylinder Head

Wire Description

Wire Number	Wire Color	Description	Wire Number	Wire Color	Description
		Power Circuits			**Lighting Circuits**
101	RD	Battery	600	BR	Dash Backlight Lamps
102	RD	Front Flood Power	608	GN	Flood Lamp - Rear
105	RD	Key Switch Power	609	YL	Flood Lamp - Side
108	BU	Washer/Wiper Power	610	OR	Flood Lamp - Front
109	RD	Alternator Output	630	GY	Flood Lamp - Rear Ripper
112	PU	Main Power Relay Output	633	BU	Accessory Switch
113	OR	Monitoring System Power	661	GN	Tachometer Lamp
114	RD	Warning Horn Power	662	YL	Speedometer Lamp
116	BR	Rear Flood Power	663	GY	Gauge Lamps
124	GN	Blower Power			**Control Circuits**
125	OR	Side Flood Power	709	OR	Transmission +8V Sensor Power Supply
130	GN	Spare Power 1	751	GN	Transmission Clutch 1 (Reverse)
131	RD	CAES Power	752	YL	Transmission Clutch 2 (Forward)
133	OR	Spare Power 2	754	BU	Transmission Clutch 3 (Third Gear)
134	YL	Spare Power 3	755	OR	Transmission Clutch 4 (Second Gear)
135	RD	VIDS Power	779	WH	Ripper Pin Puller Solenoid (Engage)
140	BU	Transmission/Steering/Braking Control Power	780	PU	Ripper Pin Puller Solenoid (Disengage)
150	RD	Engine Control Power	A700	OR	Engine Sensor Power +8V
174	PK	Accessory Power	A701	GY	Injector #1
176	YL	Seat/Console Power	A702	PU	Injector #2
177	RD	Unswitched Power	A703	BR	Injector #3
184	BU	Attachment Power	A704	GN	Injector #4
186	RD	Power Outlet Power	A705	BU	Injector #5
197	GN	Implement Control Power	A706	GY	Injector #6
198	RD	Secondary Brake Power	A707	PU	Injector #7
		Ground Circuits	A708	BR	Injector #8
200	BK	Main Chassis Ground	A746	PK	Turbocharger Outlet Pressure Sensor
201	BK	Monitor System Ground	A747	GY	Atmospheric Pressure Sensor
202	BK	Transmission Control Ground	A751	YL	Fuel Filter Differential Pressure Switch
203	BK	Chassis Ground Diagnostic	E707	GN	SPI +V Display
207	BK	Starter Ground Diagnostic	E708	PK	SPI Clock
229	BK	Engine Control Ground	E735	PU	Mon Operator Switch
270	BK	Mon Code 0	E793	BU	ATA Data Link
271	BK	Mon Code 1	E794	YL	ATA Data Link +
272	BK	Mon Code 2	E795	YL	Crankcase Pressure Sensor
273	BK	Mon Code 3	E796	GN	Oil Pressure Sensor (Unfiltered)
274	BK	Mon Code 4	E797	WH	Retarder Solenoid Return
275	BK	Mon Code 5	E798	PK	Retarder Solenoid
276	BK	Transmission Code 0	E799	BR	Fan Solenoid Return
277	BK	Transmission Code 1	F701	BR	Unused
278	BK	Transmission Code 2	F702	GN	Decelerator Pedal Sensor
279	BK	Transmission Code 3	F703	GY	Left Turbo Exhaust Temperature Sensor
280	BK	Transmission Code 4	F704	OR	Right Turbo Exhaust Temperature Sensor
290	BK	Service	F707	WH	Start Aid Solenoid Hold-In Relay
291	BK	Clear	F710	BR	Start Aid Solenoid Pull-In Relay
		Basic Machine Circuits	F713	OR	Left Turbo Inlet Pressure Sensor
301	BU	Starter No. 1 Motor	F714	PK	Right Turbo Inlet Pressure Sensor
302	OR	Starter No. 1 Motor, Resistor To Diagnostic	F715	PU	Throttle Switch (Low Idle)
304	WH	Starter Solenoid No. 1	F716	WH	Throttle Switch (Low Idle Parity)
306	GN	Starter Relay Coil To Parking Brake Switch	F717	YL	Throttle Switch (High Idle)
307	OR	Key Switch Start to Parking Brake Switch	F718	BU	Throttle Switch (High Idle Parity)
308	YL	Main Power Relay Coil	F719	BR	Crank Without Inject (Normally Closed)
310	PU	Start Aid Switch To Start Aid Solenoid	F720	GN	Crank Without Inject (Normally Open)
312	PK	Starter No. 2 Motor	F721	GY	Start Aid Switch
313	GY	Starter No. 2 Motor, Resistor To Diagnostic	F723	PK	TDC Probe +
314	PU	Starter Solenoid No. 2	F724	PU	TDC Probe
321	BR	Backup Alarm	F725	WH	Engine Fan Pump Pressure
322	GY	Front Horn	F726	YL	Injector Common 1 & 3
334	BU	Unused (Air Inlet Heater Relay)	F727	BU	Injector Common 2 & 4
337	WH	Prelube Timer to Parking Brake Switch	F728	BR	Injector Common 5 & 7
		Monitoring Circuits	F729	GN	Injector Common 6 & 8
403	GN	Alternator (R) Terminal	F780	PK	Parking Brake Switch (Normally Closed)
405	GY	Unused (Engine Oil Pressure — Monitor)	F781	BR	Downshift Switch (Normally Open)
410	WH	Level 3 Warning Horn	F782	OR	Reverse Switch (Normally Open)
411	PK	Level 2 Warning Lamp	F783	GN	Upshift Switch (Normally Closed)
412	BU	Engine Coolant Flow Switch	F784	YL	Downshift Switch (Normally Closed)
419	YL	Parking Brake Switch (Normally Open)	F785	WH	Upshift Switch (Normally Open)
420	OR	Unused (Fuel Filter Differential Pressure Switch)	F786	GY	Reverse Switch (Normally Closed)
426	BR	Powertrain Oil Filter Differential Pressure Switch	F788	PU	Left Steer Clutch
427	GN	Powertrain Oil Filter Switch Jumper	F789	YL	Right Steer Clutch
441	OR	Unused (Engine Coolant Temperature Sensor)	F790	BR	Service Brake Pedal Position
442	GY	Hydraulic Oil Temperature Sensor	F791	BU	Right Brake Solenoid
443	YL	Powertrain Oil Temperature Sensor	F792	WH	Left Brake Solenoid
447	PK	Fuel Level Sensor	F797	BU	+8V Sensor Supply
450	YL	Unused (Engine Speed)	G730	PK	Parking Brake Solenoid
499	GY	Unused (Hydraulic Oil Filter Switch)	G731	GY	Secondary Brake Solenoid
A447	PK	Prelube Oil PressureSwitch	H746	YL	Fan Control Solenoid
C413	YL	SPI Datalink Data	828	WH	Left Steer Sensor
C414	BU	SPI Datalink Load	830	OR	Right Steer Sensor
C485	YL	High Exhaust Temperature Warning Lamp	851	WH	Direction Sensor
G479	WH	Engine Service Required Warning Lamp	892	BR	CAT Data Link (-)
		Accessory Circuits	893	GN	CAT Data Link (+)
500	BR	Wiper - Front (Park)	F842	BU	Unused (Air Inlet Heater Post Heat Switch)
501	GN	Wiper - Front (Low)	F843	YL	Unused (Inching Pedal Sensor)
502	OR	Wiper - Front (Hi)	F846	PU	Unused (2F-1R Indicator Lamp)
503	BR	Wiper - Rear (Park)	F847	YL	Unused (1 F-2R Indicator Lamp)
504	YL	Wiper - Rear (Low)	F848	OR	Unused (Bi-Direction Switch N.O.)
505	BU	Wiper - Rear (Hi)	F849	WH	Unused (Bi-Direction Switch N.C.)
506	PU	Washer - Front	F850	PK	Unused
507	WH	Washer - Rear	G848	GN	Unused (Auto Downshift Indicator Lamp)
508	PU	Radio Speaker - Left	900	PU	Transmission Clutch 5 (First Gear)
509	WH	Radio Speaker - Left (Common)	973	BR	Unused (2F-2R Indicator Lamp)
511	BR	Radio Speaker - Right	975	WH	XMSN Solenoid Return
512	GN	Radio Speaker - Right (Common)	977	YL	Unused (Auto Downshift Switch)
513	OR	A/C Compressor/Refrigerant Pressure Switch	993	BR	Analog Sensor Return
515	GY	Blower Motor (Hi)	994	GY	Engine Oil Pressure
516	GN	Blower Motor (Medium)	995	BU	Engine Coolant Temperature
517	BU	Blower Motor (Low)	996	GN	Engine Speed/Timing Sensor Power
521	YL	A/C Switch To Refrigerant Pressure Switch	997	OR	Analog Sensor Power (+ 5V)
522	WH	A/C Clutch To Evaporator Thermostat Switch	998	BR	Digital Sensor Return
523	BR	Wiper - Left (Park)	999	WH	Primary Camshaft Speed/Timing
524	BU	Wiper - Left (Low)	C989	PU	Unused
525	GY	Wiper - Left (Hi)	E900	WH	Unused (Trans Output SPD 1+)
526	YL	Wiper - Right (Park)	E901	GN	Unused (Trans Output SPD 1-)
527	GN	Wiper - Right (Low)	E902	PU	Unused (Trans Intermediate SPD 1+)
528	PK	Wiper - Right (Hi)	E903	YL	Unused (Trans Intermediate SPD 1-)
529	WH	Washer Left	E904	BR	Unused (Trans Intermediate SPD 2+)
530	OR	Washer Right	E905	BU	Unused (Trans Intermediate SPD 2-)
553	YL	Pitch Solenoid	E906	OR	Unused (Trans Output SPD 2+)
554	PK	Single/Dual Tilt Selector Switch	E907	GY	Unused (Trans Output SPD 2-)
567	WH	Blower Switch to A/C On Switch	E908	BR	Unused (Trans Input SPD +)
592	BU	12 Volt DC/DC Converter Power Output	E909	WH	Unused (Trans Input SPD -)
A513	PK	12 Volt DC/DC Converter Memory Output	G939	PK	XMSN Switch Return
A523	PU	Temperature Potentiometer +	K977	PK	Steering Oil Temperature Sensor
A524	BR	Temperature Potentiometer Signal	K978	BU	Pump Solenoid
A525	GN	Temperature Potentiometer -	K984	GY	Start Aid Relay Output

CATERPILLAR®

SENR1787-01
June 2005

Schematic

D11R Track Type Tractor Electrical System

9TR1-UP
9XR1-UP

©2005 Caterpillar
All Rights Reserved

Printed in U.S.A.

Electrical Schematic Symbols And Definitions

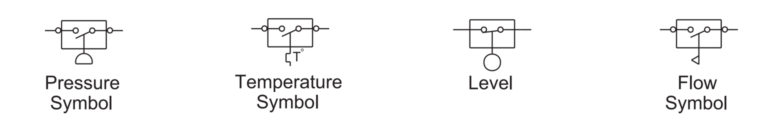

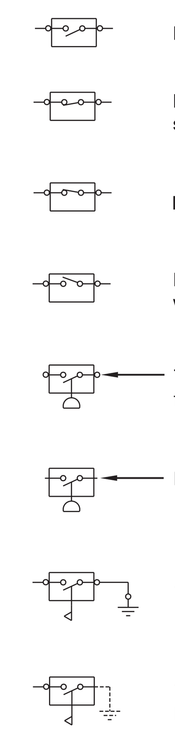

Normally open switch that will close with an increase of a specific condition (temp-press-etc.).

Normally open switch that is closed due to an applied condition, and will open again with a specific decrease in that condition.

Normally closed switch that will open with an increase of a specific condition.

Normally closed switch that is open due to an applied condition, and will close again with a specific decrease in that condition.

The circle indicates that the component has screw terminals and a wire can be disconnected from it.

No circle indicates that the wire cannot be disconnected from the component.

This indicates that the component has a wire connected to it that is connected to ground.

This indicates that the component does not have a wire connected to ground. It is grounded by being fastened to the machine.

Failure Mode Identifiers (FMI)[1]

FMI No.	Failure Description
0	Data valid but above normal operational range.
1	Data valid but below normal operational range.
2	Data erratic, intermittent, or incorrect.
3	Voltage above normal or shorted high.
4	Voltage below normal or shorted low.
5	Current below normal or open circuit.
6	Current above normal or grounded circuit.
7	Mechanical system not responding properly.
8	Abnormal frequency, pulse width, or period.
9	Abnormal update.
10	Abnormal rate of change.
11	Failure mode not identifiable.
12	Bad device or component.
13	Out of calibration.

[1]The FMI is a diagnostic code that indicates what type of failure has occurred.

Off Machine Switch Specification

Part No.	Function	Actuate	Deactuate	Contact Position
3E-6428	Coolant Flow (CMS)	362 ± 29 mN (45.6mm ID point) (1.3 ± .1 oz, 1.8 inID point)	303 mN MIN (1.1 oz MIN)	Normally Open
3E-9350	PTO Temperature	52 ± 3°C (125.6 ± 5.4°F)	43°C MIN (109.4°F MIN)	Normally Closed
9X-7781	Power Train Filter Pressure (EMS)	210 ± 70 kPa (30 ± 10 psi)		Normally Open
105-9152	PreLube Oil Pressure	30 ± 7 kPa (4.34 ± 1 psi)	30 ± 7 kPa (4.34 ± 1 psi)	Normally Closed
114-5333	Refrigerant Pressure (AC)	275 to 1750 kPa [1] (40 to 255 psi)		Normally Open [2]
116-9933	Fuel Filter Press (VIMS)	138 ± 14 kPa (20.0 ± 2.0 psi)	83 kPa MIN (12.0 psi MIN)	NormallyClosed

[1] With increasing pressure the closed condition can be maintained up to 2800 kPa (405 psi), with decreasing pressure the closed condition can be maintained down to 170 kPa (25 psi).

[2] Contact position at the contacts of the harness connector.

Resistor, Sender and Solenoid Specifications

Part No.	Component Description	Resistance (Ohms)[1]
9G-1950	Resistor - Blower 2	Overall 2.0 ± .1; Tap 1.0 ± .05
3E-7842	Resistor - Starter(s)	150 ± 7.5
6V-2455	Sensor - TDC Cal	110 - 220
134-3998	Solenoid - A/C Clutch	17.6 ± 0.6
3E-9205	Solenoid - Dual Tilt	24.9
127-0272	Solenoids - Fan Valve	3.00; 7.85 MAX
133-2250	Solenoids: Park Brake Dump, Service Brake Dump	41.9
121-4030	Solenoids: Left Steer Brake, Left Steer Clutch, Right Steer Brake, Right Steer Clutch	7.75 ± 1.0
147-1223	Solenoid - Retarder	34.3 ± 1.7
3E-8575	Solenoid - Ripper Pin Puller	24.9
3E-3748	Solenoid - Transmission	8.5

[1] At room temperature unless otherwise noted.

Connector Location [1]

Connector Number	Schematic Location	Machine Location
CONN 1 Acc	A-11	34
CONN 2	B-12	36
CONN 3	D-12	C
CONN 4	E-12	B
CONN 5	F-12	6
CONN 6	H-11	6
CONN 7	H-12	6
CONN 8 Datalink Service	F-11	5
CONN 9 Monitor Service	G-11	5
CONN 10	G-11	32
CONN 11	I-11	15
CONN 12 Code Plug	C-10	A
CONN 13	I-10	12
CONN 14	I-10	12
CONN 15	A-9	7
CONN 16	A-9	7
CONN 17	B-8	Custom
CONN 18	G-9	37
CONN 19	H-9	37
CONN 20	B-8	23
CONN 21	C-8	23
CONN 22	D-9	23
CONN 23	F-8	38
CONN 24 Code Plug	I-8	C
CONN 25	A-7	39
CONN 26	B-6	38
CONN 27	D-6	38
CONN 28	E-6	38
CONN 29	E-6	A
CONN 30	E-6	38
CONN 31	E-6	38
CONN 32	F-6	38
CONN 33	F-6	38
CONN 34	G-6	38
CONN 35	B-5	29
CONN 36	C-5	38
CONN 37	F-5	20
CONN 38	F-5	20
CONN 39	I-5	40
CONN 40	F-4	5
CONN 41	G-4	20
CONN 42 Electronic Diagnostic	H-4	5
CONN 43	H-4	5
CONN 44	A-3	F
CONN 45	E-3	F
CONN 46	F-3	F
CONN 47	C-2	41
CONN 48	F-2	25
CONN 49	G-2	42
CONN 50	C-8	34
CONN 51	D-5	11

[1]The connectors shown in this chart are for harness to harness connectors with a minimum of four contacts and other special connectors. Connectors that join a harness to a component are generally located at or near the component. See the Component Location Chart

Monitoring System Service Modes

Mode Of Operation	Mode Number
Normal	0
Harness Code	1
Numeric Readout	2
Service	3
Tattletale (Log)	4
Units	5
Steering Brake Calibration	6
Transmission Calibration	7
Component Data Display	8
Charging System Display	9

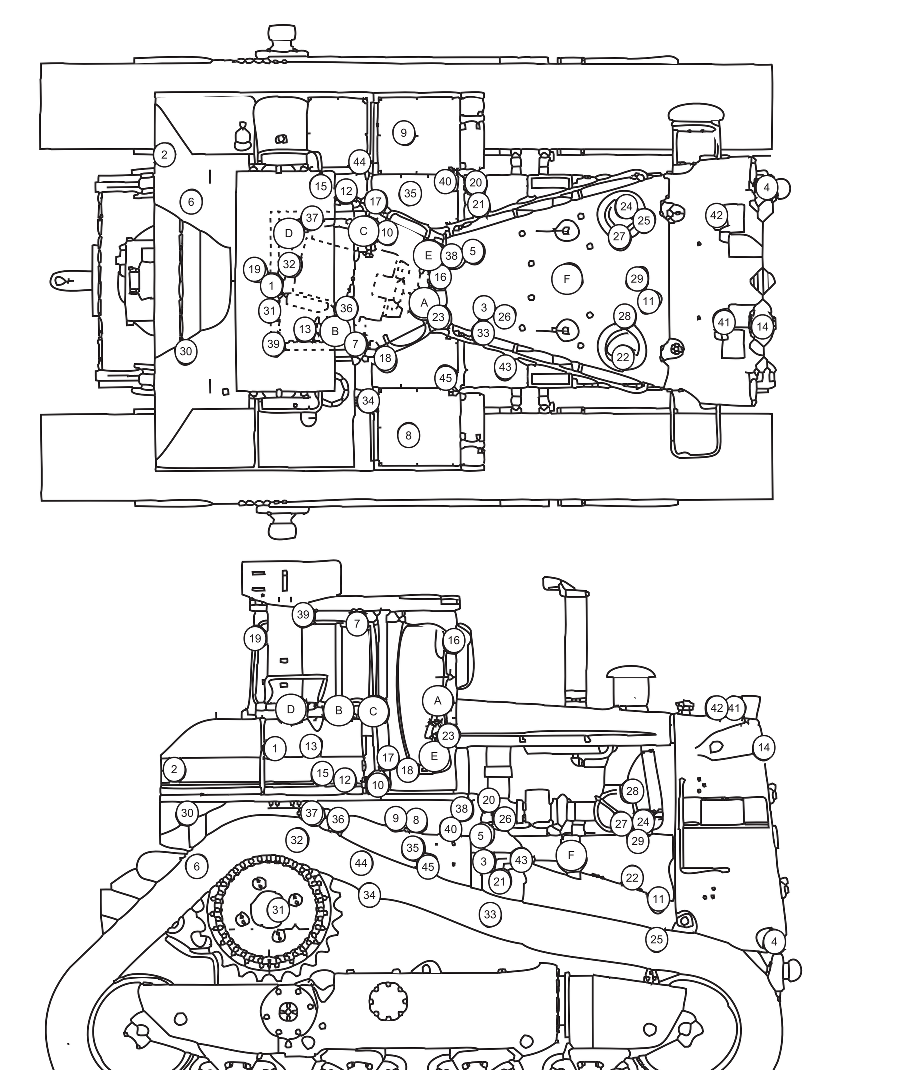

Machine Harness Connector And Component Locations

Related Electrical Service Manuals

Title	Form Number
Alternator 9X-7803	SENR7508
Caterpillar Monitoring System	SENR6717
Engine Control	SENR1037
Starting And Charging Systems	SENR2947
Starting Motor 6V-0889 123-8689 (Atth)	SENR3860
Electronic Troubleshooting D11 3508 EUI Engine	SENR5590
Power Train (Electrical System)	SENR8367

Harness And Wire Electrical Schematic Symbols

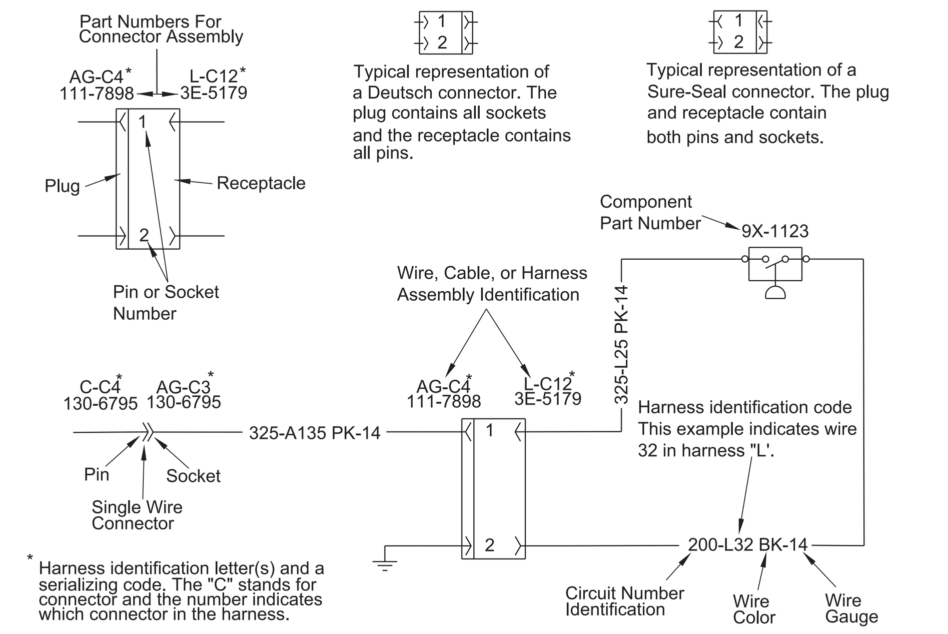

Electrical Schematic Symbols And Definitions

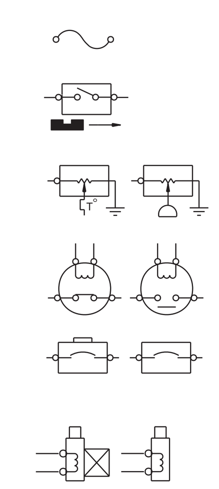

FUSE - A component in an electrical circuit that will open the circuit if too much current flows through it.

REED SWITCH - A switch whose contacts are controlled by a magnet. A magnet closes the contacts of a normally open reed switch; it opens the contacts of a normally closed reed switch.

SENDER - A component that is used with a temperature or pressure gauge. The sender measures the temperature or pressure. Its resistance changes to give an indication to the gauge of the temperature or pressure.

RELAY (Magnetic Switch) - A relay is an electrical component that is activated by electricity. It has a coil that makes an electromagnet when current flows through it. The electromagnet can open or close the switch part of the relay.

CIRCUIT BREAKER (C/B) - A component in an electrical circuit that will open the circuit if too much current flows through it. This does not destroy the circuit breaker and it can be reset to become part of the circuit again.

SOLENOID - A solenoid is an electrical component that is activated by electricity. It has a coil that makes an electromagnet when current flows through it. The electromagnet can open or close a valve or move a piece of metal that can do work.

SENR1787-01
30 Page

schematicat.com
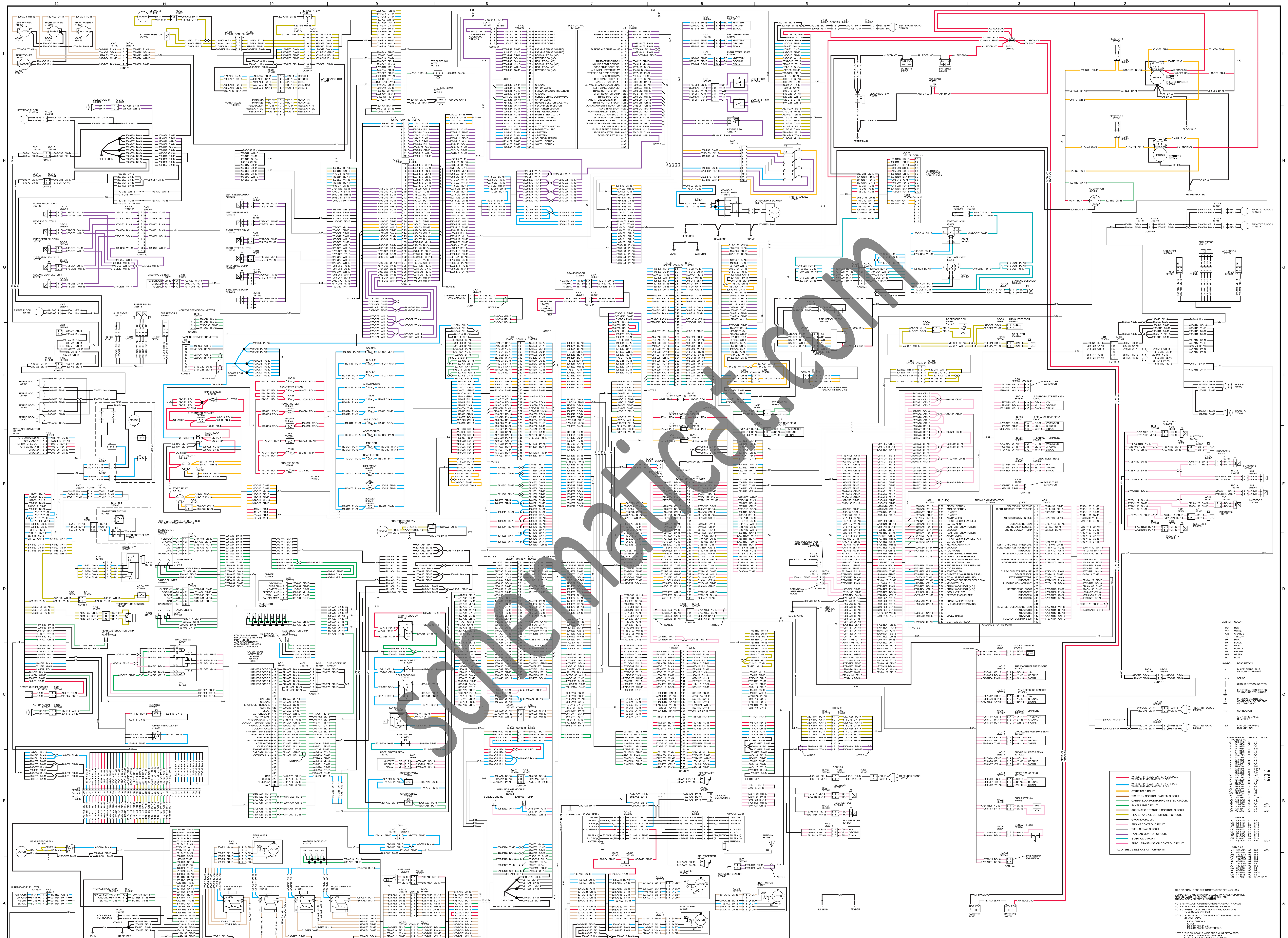
SENR1787-01
30 Page, Color 2