CATERPILLAR®

KENR5626-05
August 2014

Schematic

D11T Track-Type Tractor Electrical System

JEL1-UP
JNS1-UP

Volume 1 of 3: Engine and Chassis Wiring

© 2014 Caterpillar, All Rights Reserved

Printed in U.S.A.

FRONT RIGHT ENGINE

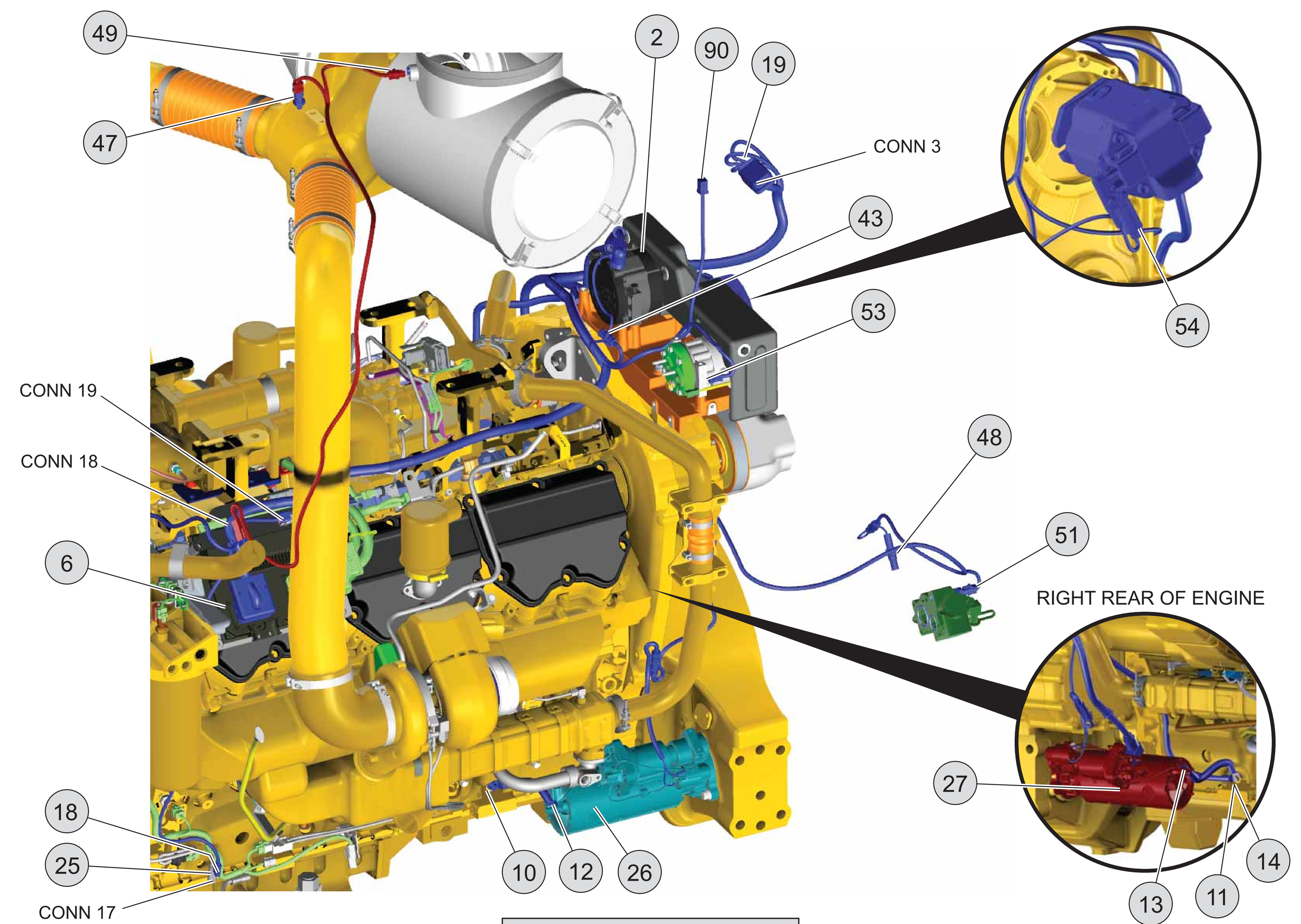

LEFT SIDE OF ENGINE

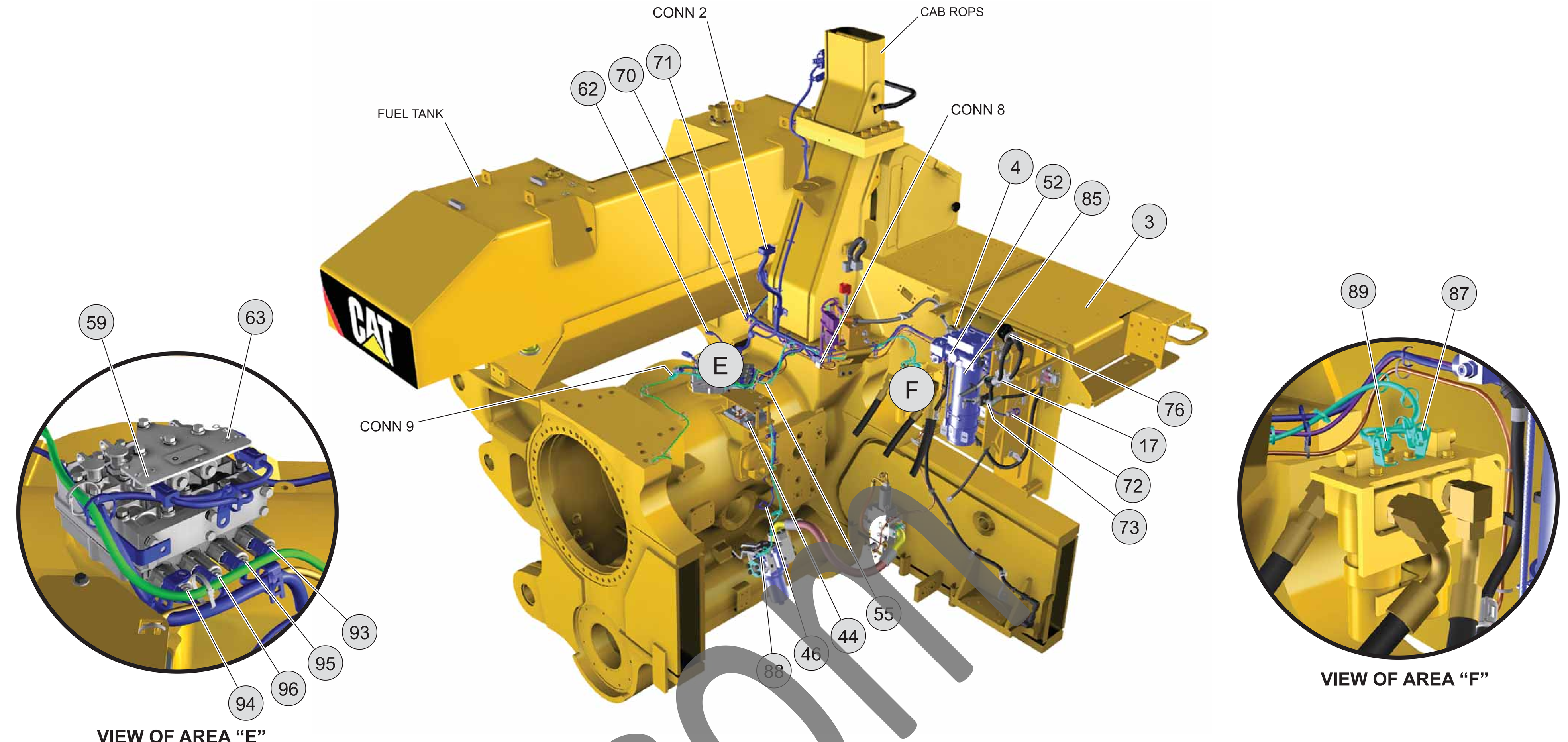

LH FENDER WIRING

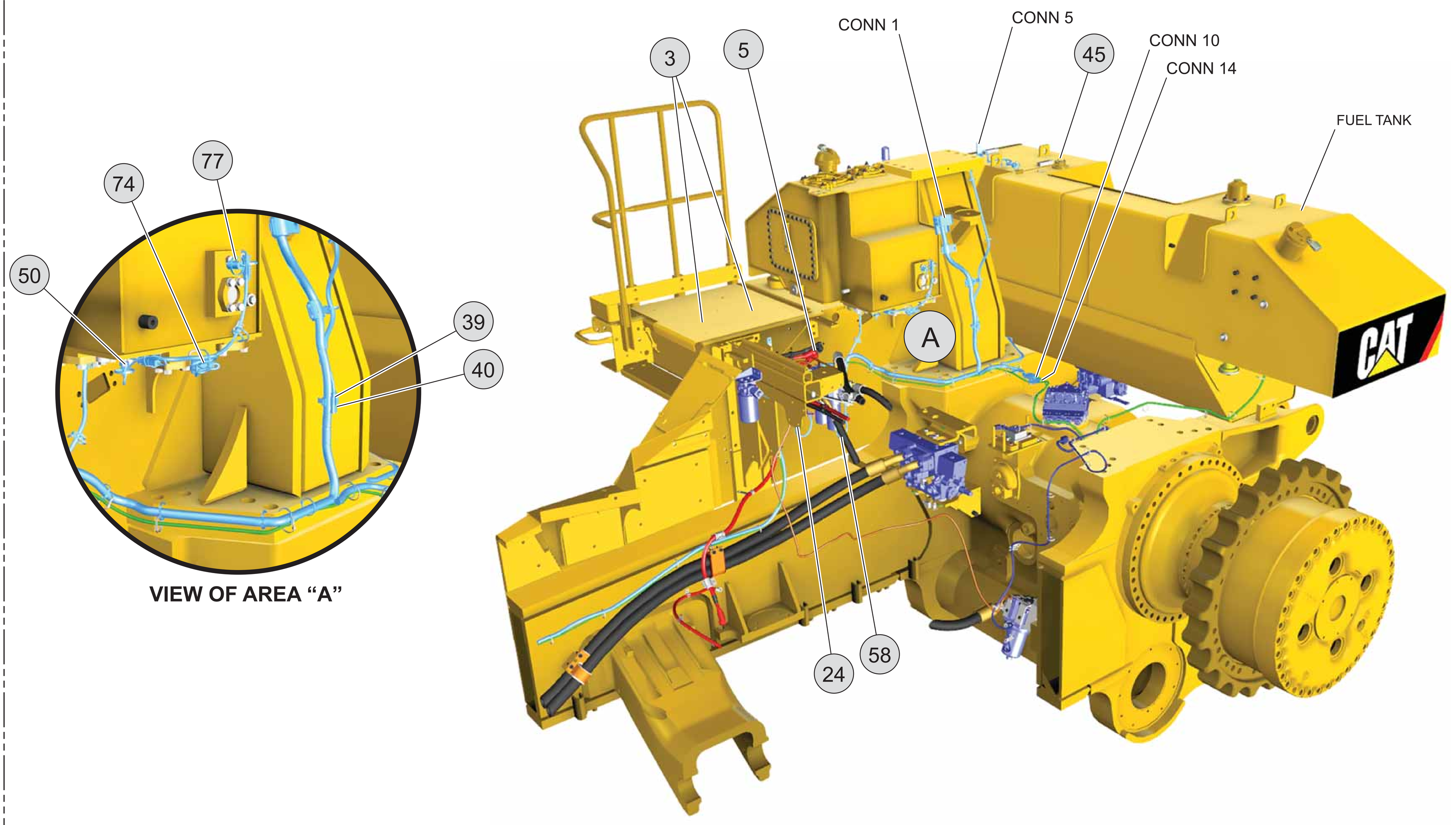

RH FENDER WIRING

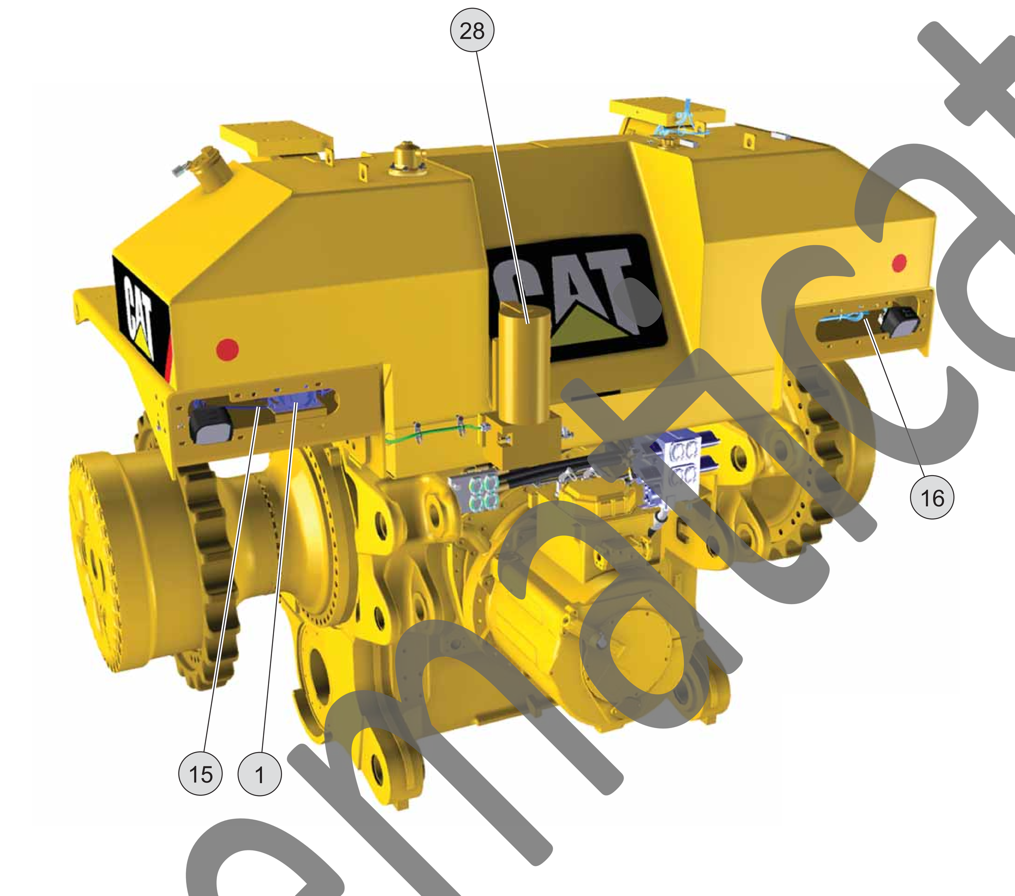

REAR CHASSIS WIRING

Component Location (Volume 1)					
Component	Schematic Location	Machine Location	Component	Schematic Location	Machine Location
Alarm - Backup	G-14	1	Sensor - Temperature (TC Oil)	C-4	51
Alternator	C-6	2	Sensor - Temperature (XMSN Oil - Sump)	G-12	52
Batteries	J-8	3	Solenoid - Compressor Clutch	G-6	53
Block - Junction #1	J-7	4	Solenoid - Demand Fan	C-4	54
Block - Junction #2	I-7	5	Solenoid - Diverter	I-16	55
Control - Engine	H-4	6	Solenoid - Dual Tilt	D-2	56
Controller - Actuator	F-9	7	Solenoid - Fan Bypass	E-1	57
Converter - 12V	J-9	8	Solenoid - Implement Shutoff	C-12	58
Diode - Ladder Block	C-9	9	Solenoid - Park Brake Dump	F-12	59
Ground - Block (Starter Motor #1)	H-5	10	Solenoid - Pitch Regeneration	D-2	60
Ground - Block (Starter Motor #2)	B-5	11	Solenoid - Reverse Fan	E-1	61
Ground - Frame (Starter Motor #1)	H-5	12	Solenoid - Ripper Pin	H-14	62
Ground - Frame (Starter Motor #2)	B-5	13	Solenoid - Service Brake Dump	F-12	63
Ground - Alternator	B-6	14	Solenoid - Start Aid	D-4	64
Ground - Fender (LH)	D-12	15	Solenoids - XMSN Speed Clutch		
Ground - Fender (RH)	C-13	16	Solenoid - Clutch (Forward)	E-16	65
Ground - Frame (Disconnect Switch)	J-6	17	Solenoid - Clutch (Reverse)	E-16	66
Ground - Frame (Prelube Motor)	H-7	18	Solenoid - Clutch (1st Gear)	F-16	67
Ground - Platform	G-5	19	Solenoid - Clutch (2nd Gear)	D-16	68
Horn - Forward (High)	F-2	20	Solenoid - Clutch (3rd Gear)	F-16	69
Horn - Forward (Low)	F-2	21	Suppressor - Arc #1	H-14	70
Motor - Condenser Fan #1	A-16	22	Suppressor - Arc #2	G-14	71
Motor - Condenser Fan #2	A-16	23	Switch - A/C (High)	G-12	72
Motor - Fuel Priming Pump	B-13	24	Switch - A/C (Low)	G-12	73
Motor - Prelube	I-7	25	Switch - Case Drain Filter Bypass	B-12	74
Motor - Starter #1	H-5	26	Switch - Coolant Flow	D-4	75
Motor - Starter #2	C-5	27	Switch - Disconnect	J-7	76
Pump - Autolube	B-9	28	Switch - Fan Return Filter Bypass	C-12	77
Radio - GPS	J-9	29	Switch - Ingress Lighting #1	G-10	78
Radio - GPS AccuGrade	J-9	30	Switch - Ingress Lighting #2	G-9	79
Receiver - GPS AccuGrade	I-9	31	Switch - Ladder	E-10	80
Relay - Actuator Enable	D-9	32	Switch - Machine Shutdown #1	G-10	81
Relay - Condenser #1	A-15	33	Switch - Machine Shutdown #2	G-9	82
Relay - Condenser #2	A-15	34	Switch - Pressure (Autolube)	A-9	83
Relay - Ladder (Lower Solenoid Disable)	E-9	35	Switch - Proximity	E-9	84
Relay - Ladder (Lower)	E-9	36	Switch - PTO Filter Bypass	G-12	85
Relay - Ladder (Raise Solenoid Cutout)	D-9	37	Switch - Remote Control Mode	G-9	86
Relay - Ladder (Raise)	E-9	38	Switch - Screen (Fan Pump Out)	C-12	87
Resistor - Terminating (Accugrade #1)	A-13	39	Switch - Screen (Main Hydraulic Pump Out)	C-12	88
Resistor - Terminating (Accugrade #2)	A-13	40	Switch - Screen (Tilt Pump Out)	C-12	89
Resistor - Terminating (Accugrade/CAES #1)	I-9	41	Switch - Starter Disconnect	H-6	90
Resistor - Terminating (Accugrade/CAES #2)	I-9	42	Switch - Underhood Work Light #1	F-1	91
Resistor - Terminating A2	E-6	43	Switch - Underhood Work Light #2	E-1	92
Sensor - Inclination	J-16	44	Valve - Brake		
Sensor - Level (Fuel)	D-14	45	Solenoid - Steering Clutch (LH)	F-12	93
Sensor - Level (PTO)	G-12	46	Solenoid - Steering Clutch (RH)	E-12	94
Sensor - Pressure (Air Filter)	E-4	47	Solenoid - Brake Clutch (LH)	F-12	95
Sensor - TC Speed (Out)	C-4	48	Solenoid - Brake Clutch (RH)	F-12	96
Sensor - Temperature (Air Inlet)	E-4	49	Valve - Ladder Group	C-9	97
Sensor - Temperature (Hydraulic Oil)	B-12	50			

Connector Location (Volume 1)	
Connector Number	Schematic Location
CONN 1	B-14
CONN 2	F-14
CONN 3	F-6
CONN 4	A-14
CONN 5	A-14
CONN 6	E-15
CONN 7	E-14
CONN 8	I-15
CONN 9	D-13
CONN 10	D-11
CONN 11	E-12
CONN 12	C-10, C-11
CONN 13	H-12
CONN 14	B-10
CONN 15	E-10
CONN 16	J-10
CONN 17	I-6
CONN 18	E-4
CONN 19	E-4
CONN 20	D-3
CONN 21	D-3
CONN 22	D-2
CONN 23	E-2
CONN 24	F-2
CONN 25	F-2

The connectors shown in this chart are for harness to harness connectors. Connectors that join a harness to a component are generally located at or near the component. See the Component Location Chart.

Related Electrical Service Manuals	
Title	Form Number
Alternator: 272-1889	SENR4130
Starting Motor: 296-5687	SENR3860
Power Train / Implement Control:	KENR8685
VIMS™ 3G / Product Link:	KENR8958
Engine Control:	KENR9197

Harness And Wire Electrical Schematic Symbols

Symbols

Pressure Symbol | Temperature Symbol | Level Symbol | Flow Symbol | Circuit Breaker Symbol

Symbols and Definitions

Fuse: A component in an electrical circuit that will open the circuit if too much current flows through it.

Switch (Normally Open): A switch that will close at a specified point (temp, press, etc.). The circle indicates that the component has screw terminals and a wire can be disconnected from it.

Switch (Normally Closed): A switch that will open at a specified point (temp, press, etc.). No circle indicates that the wire cannot be disconnected from the component.

Ground (Wired): This indicates that the component is connected to a grounded wire. The grounded wire is fastened to the machine.

Ground (Case): This indicates that the component does not have a wire connected to ground. It is grounded by being fastened to the machine.

Reed Switch: A switch whose contacts are controlled by a magnet. A magnet closes the contacts of a normally open reed switch; it opens the contacts of a normally closed reed switch.

Sender: A component that is used with a temperature or pressure gauge. The sender measures the temperature or pressure. Its resistance changes to give an indication to the gauge of the temperature or pressure.

Relay (Magnetic Switch): A relay is an electrical component that is activated by electricity. It has a coil that makes an electromagnet when current flows through it. The electromagnet can open or close the switch part of the relay.

Solenoid: A solenoid is an electrical component that is activated by electricity. It has a coil that makes an electromagnet when current flows through it. The electromagnet can open or close a valve or move a piece of metal that can do work.

Magnetic Latch Solenoid: A magnetic latch solenoid is an electrical component that is activated by electricity and held latched by a permanent magnet. It has two coils (latch and unlatch) that make electromagnet when current flows through them. It also has an internal switch that places the latch coil circuit open at the time the coil latches.

Harness and Wire Symbols

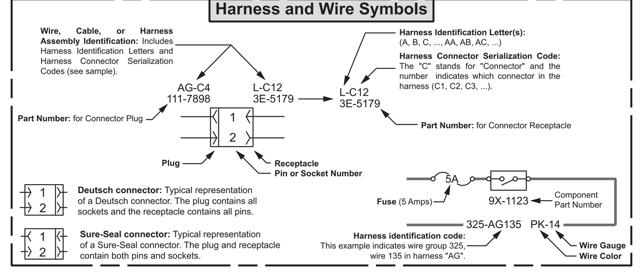

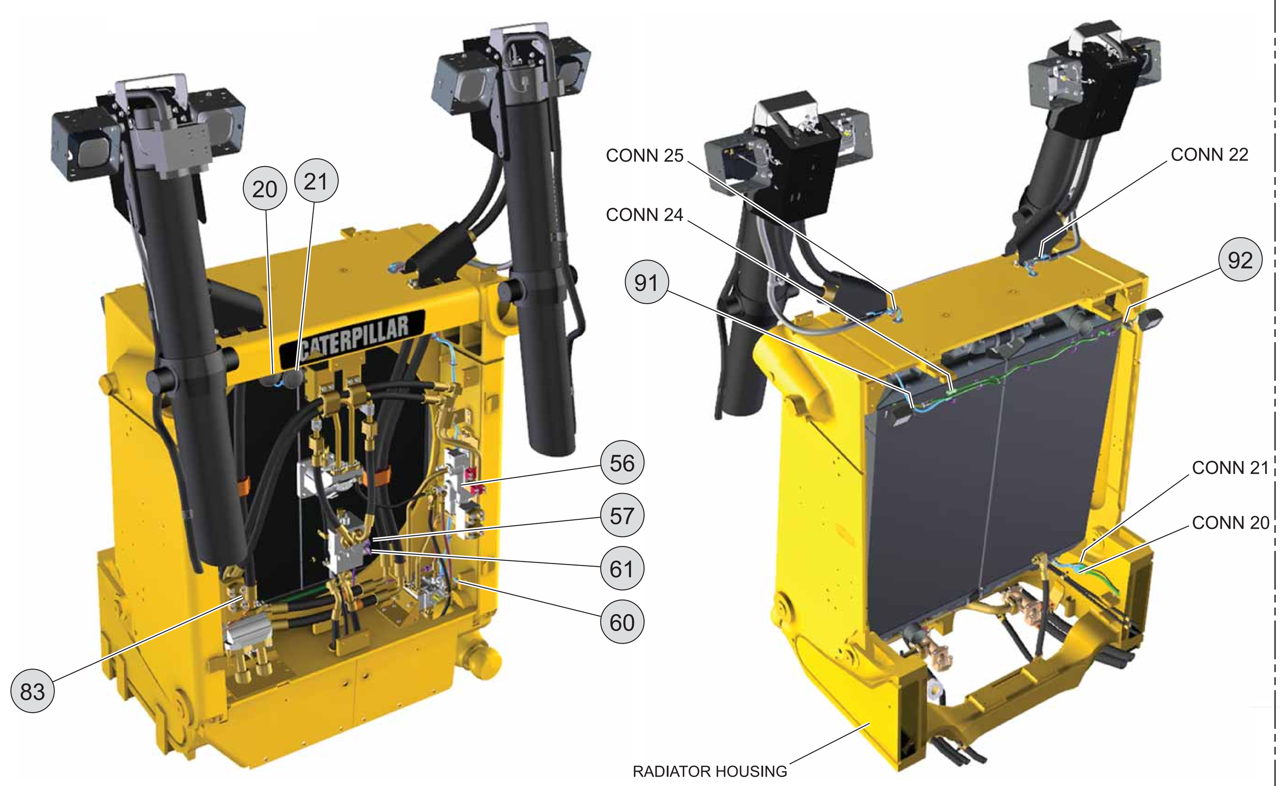

RADIATOR WIRING

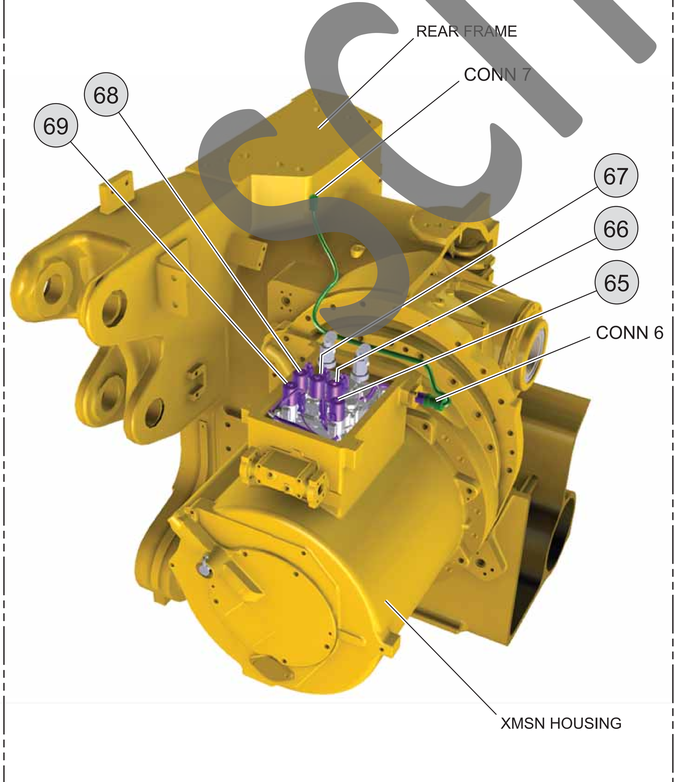

TRANSMISSION SPEED CLUTCHES

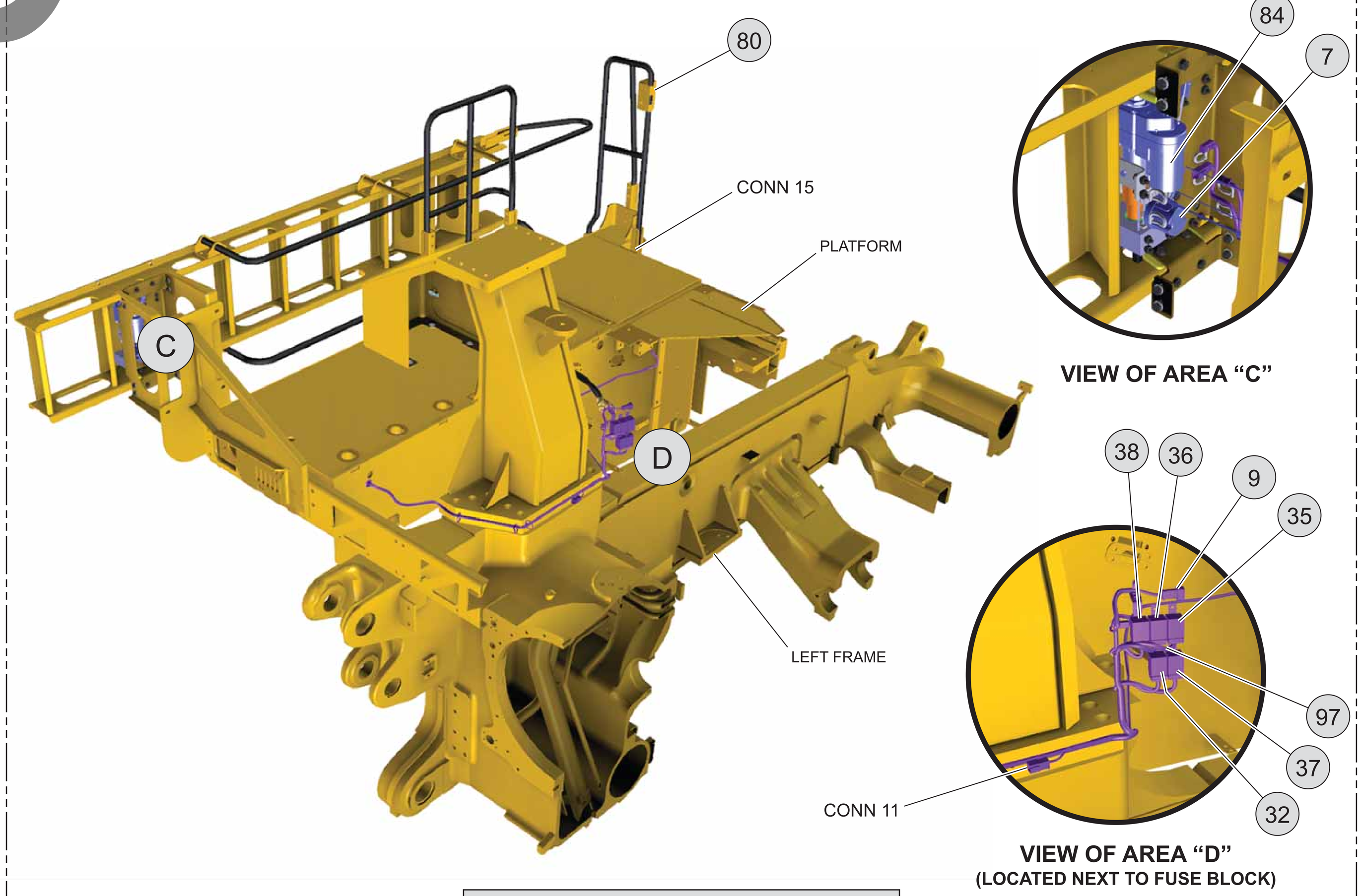

ACCESS LADDER WIRING (ATCH)

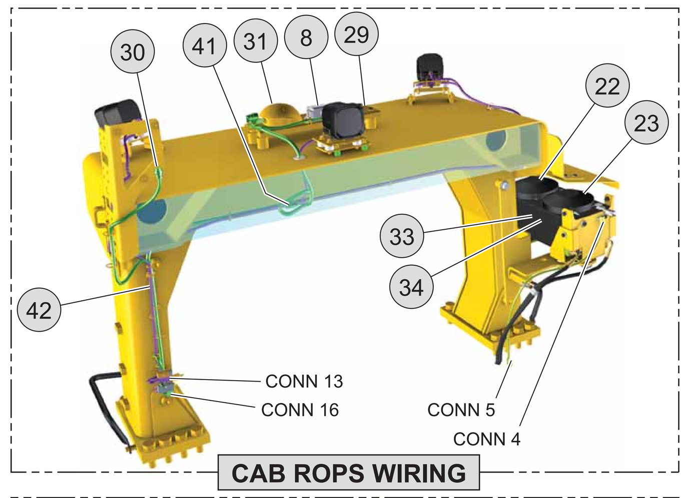

CAB ROPS WIRING

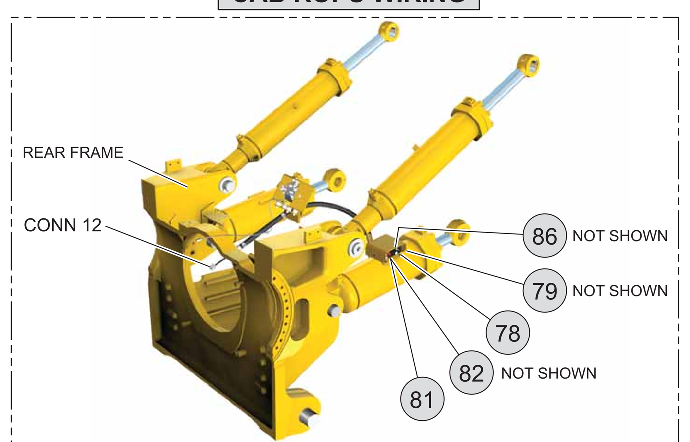

SERVICE CENTER WIRING

Resistor, Sender and Solenoid Specifications			
Part No.		Component Description	Resistance (Ohms)[1]
3E-8575	Solenoid:	Ripper Pin	24.9 ± 0.4
3E-9205	Solenoid:	Dual Tilt	24.9 ± 0.4
134-2540	Resistor:	CAN A Datalink #2, CAN B Datalink #1, CAN B Datalink #2, CAN D Datalink #1, CAN D Datalink #2, AccuGrade	120 ± 12
149-2610	Solenoid:	Fan Bypass	32.6 ± 1.6
152-8340	Solenoid:	CTCT Diverter, Reverse Fan	32.6 ± 1.6
152-8346	Solenoid:	Pitch Regeneration	32.6 ± 1.6
172-2392	Solenoid:	Parking Brake Dump, Service Brake Dump	41.9 ± 2.1
174-4909	Solenoid:	Steering Brake (LH), Steering Brake (RH), Steering Clutch (LH), Steering Clutch (RH)	8.7 ± 0.4
183-5106	Solenoid:	Compressor Clutch	17.6 ± 0.6
258-8894	Solenoid:	Ladder (Lower), Ladder (Raise)	41.9 ± 2.1
329-5064	Solenoid:	Implement Shutoff	41.9 ± 2.1
239-1134	Solenoid:	Start Aid	20
192-4370	Solenoid:	Demand Fan	4.75 ± 0.3

[1] At room temperature unless otherwise noted.

Off-Machine Switch Specification					
Part No.	Function		Actuate	Deactuate	Contact Position
114-5333	A/C High Pressure	Low	275 kPa (40 psi)	170 ± 55 kPa (24.65 ± 8 psi)	1-3 Normally Open 2-3 Normally Closed
		High	2800 ± 140 kPa (406 ± 20.3 psi)	1750 ± 200 kPa (253.8 ± 29 psi)	
149-6371	A/C Low Pressure		103.4 ± 13.8 kPa (14.9 ± 2 psi)	34.5 ± 7 kPa (5 ± 1.01 psi)	Normally Open
171-8708	Engine Coolant Flow		362 ± 29 mN at point "X" (1.3 ± 0.1 oz)	303 mN MIN (1.08 oz MIN)	Normally Open

[1] With increasing pressure the closed condition can be maintained up to 2800 kPa (405 psi), with decreasing pressure the closed condition can be maintained down to 170 kPa (25 psi).

[2] Contact position at the contacts of the harness connector.

schematicrat.com

KENR5626-05 VOL 1 of 3

42 Page, (Dimensions: 56 inches x 35 inches)

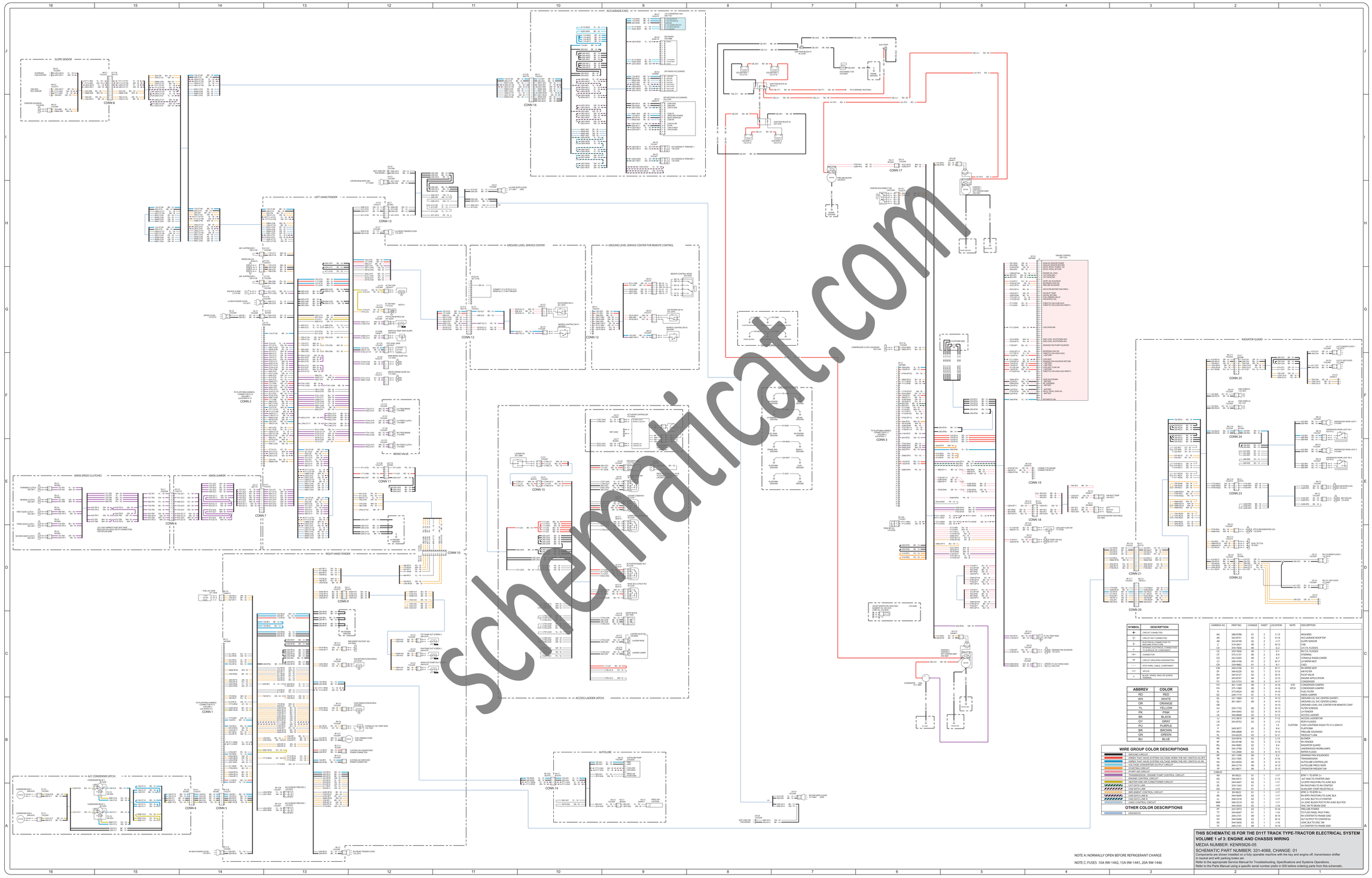

SYMBOL	DESCRIPTION
+	CIRCUIT CONNECTED
+	CIRCUIT NOT CONNECTED
+	ELECTRICAL CONNECTION TO FRAME OR GROUND
+	INTERNAL ELECTRICAL CONNECTION TO SURFACE OF COMPONENT
+D+	CONNECTOR
⏚	CIRCUIT GROUNDING DESIGNATION
~	STOP WIRE, CABLE, COMPONENT
>>>	SPLICE
●	BLADE, SPADE, RING OR SERVEW TERMINAL

ABBREV	COLOR
RD	RED
WH	WHITE
OR	ORANGE
YL	YELLOW
PK	PINK
BK	BLACK
GY	GRAY
PU	PURPLE
BR	BROWN
GN	GREEN
BU	BLUE

WIRE GROUP COLOR DESCRIPTIONS

- GROUND CIRCUIT
- ENGINE CONTROL SYSTEM VOLTAGE WHEN THE KEY SWITCH IS OFF
- WIRES THAT HAVE SYSTEM VOLTAGE WHEN THE KEY SWITCH IS ON
- VOLTAGE CONVERTER OUTPUT CIRCUIT
- STARTING CIRCUIT
- START AID CIRCUIT
- ENGINE CONTROL ENGINE PUMP CONTROL CIRCUIT
- ENGINE CONTROL CIRCUIT
- HEATER AND AIR CONDITIONER CIRCUIT
- CAT DATA LINK
- CAN DATA LINK
- IMPLEMENT CONTROL CIRCUIT
- CAT DATA LINK B
- CAN DATA LINK B
- CABS CONTROL CIRCUIT

OTHER COLOR DESCRIPTIONS

- HIGHWATE

HARNESS AS	PART NO.	CHANGE	SHEET	LOCATION	NOTE	DESCRIPTION
AG	288-8788	01	2	C-13		WASHERS
AK	343-8751	02	3	K-14		ACCUGRADE ROOFTOP
AR	343-8752	02	3	K-14		ACCUGRADE
CA	314-3051	02	1	B-13		LIGHT
CA	339-7836	00	1	E-2		LH CYL FLOODS
CJ	339-7836	00	1	D-1		RH CYL FLOODS
CF	375-5117	00	2	K-9		STERNING
CG	349-4196	01	2	B-11		LH WIPER MOT RADSLOWER
CL	349-4196	01	2	B-11		LH WIPER MOT
CN	339-9862	01	2	K-1		CAB
CW	349-4196	01	2	B-11		RH WIPER MOT
EF	346-6220	02	1	D-13		AIR FILTER
EG	343-8747	02	1	D-15		ENGINE APPLICATION
EP	343-8747	02	1	D-15		ENGINE APPLICATION
FC	325-5753	00	3	A-17		CONDENSER
FH	361-1249	00	3	A-16	STD	CONDENSER JUMPER
FH	375-1389	00	3	A-16	ATCH	CONDENSER JUMPER
GE	349-7171	01	3	F-10		CAB
GE	349-7175	01	3	F-10		CAB CLAMPER
GL	331-1964	01	3	H-13		GROUND LVL SVC CENTER (SHORT)
GL	361-3651	00	3	H-13		GROUND LVL SVC CENTER (LONG)
GR	359-1733	00	3	H-13		GROUND LEVEL SVC CENTER FOR REMOTE CONT
HJ	344-5845	02	3	H-13		LH FENDER
HP	344-5845	02	3	H-13		LH FENDER
LK	346-9668	02	3	E-12		ACCESS LADDER
LJ	372-5819	00	3	F-12		ACCESS LADDER SW
LR	343-8752	02	3	J-13		HOPS FLOODS
LT			3	J-13	CUSTOM	HOPS FLOODS EQUIV TO 313-2094 01
P	349-3077	05	2	K-4		PLATFORM
PH	296-6808	01	1	H-15		PRELUBE SOLENOID
PL	334-8229	03	2	G-11		PRODUCT LINE
PR	334-9414	03	2	C-10		BLOWER
RA	343-8280	02	1	C-14		RADIATOR
RE	343-8280	02	1	C-14		RADIATOR GUARD
RK	345-3790	02	1	E-2		UNDERHOOD WORKLAMPS
RL	125-2095	02	1	H-15		WIPER FLOOD
RP	347-1390	00	1	E-2		DEMAND FAN SOLENOIDS
SA	353-8904	00	3	A-12		AUTOLUBE PRESS
SB	353-8904	00	3	A-12		AUTOLUBE CONTROLLER
SE	364-0314	00	3	A-12		AUTOLUBE PRESS SNSR
VJ	362-8871	00	2	D-15		OPERATOR PRESENT SW
CABLES						
AA	BV-0622	01	1	J-17		BTRY 1 TO BTRY 2 +
CA	344-6415	02	1	J-15		ALT GND TO STARTER GND
CC	344-5947	02	1	L-17		LH BTRY PASS-THRU TO JUNC BLK
EE	339-1543	01	1	J-17		RH PASS-THRU TO RH STARTER
GG	344-5651	01	1	J-15		ALIAS,AIR START RECEPTACLE
H	BV-0622	01	1	J-17		BTRY 2 TO STARTER +
JK	344-5249	02	1	L-17		RH BTRY SWITCHED PS TO JUNC BLK
JL	344-5249	02	1	L-17		LH JUNC BLK PS TO RH STARTER
MM	346-5219	02	1	L-17		LH JUNC BLOCK PDS TO RH JUNC BLK PDS
NN	344-5650	02	1	J-16		DISC SW TO BEAM GND
PP	353-2813	00	1	H-16		PRELUBE GND
TT	344-5947	02	1	L-16		RH PDS PASS-THRU TO ALT THRU
UU	344-5947	00	1	L-16		ALT OUTPUT TO FRAME GND
VV	344-5946	02	1	B-16		ALT OUTPUT TO STARTER B+
XX	344-5650	02	1	J-16		JUNC BLK TO DISC SW
YY	369-2101	00	1	H-14		LH STARTER TO FRAME GND

NOTE A: NORMALLY OPEN BEFORE REFRIGERANT CHARGE

NOTE C: FUSES 10A 9W-1442, 15A 9W-1441, 20A 9W-1446

THIS SCHEMATIC IS FOR THE D11T TRACK TYPE-TRACTOR ELECTRICAL SYSTEM VOLUME 1 of 3: ENGINE AND CHASSIS WIRING

MEDIA NUMBER: KENR5626-05

SCHEMATIC PART NUMBER: 331-4068, CHANGE: 01

Components are shown installed on a fully operable machine with the key and engine off, transmission shifter in neutral and all switches in the off position.

Refer to the appropriate Service Manual for Troubleshooting, Specifications and Systems Operations.

Refer to the Parts Manual using a specific serial number prefix in SIS before ordering parts from this schematic.

Schematicat.com

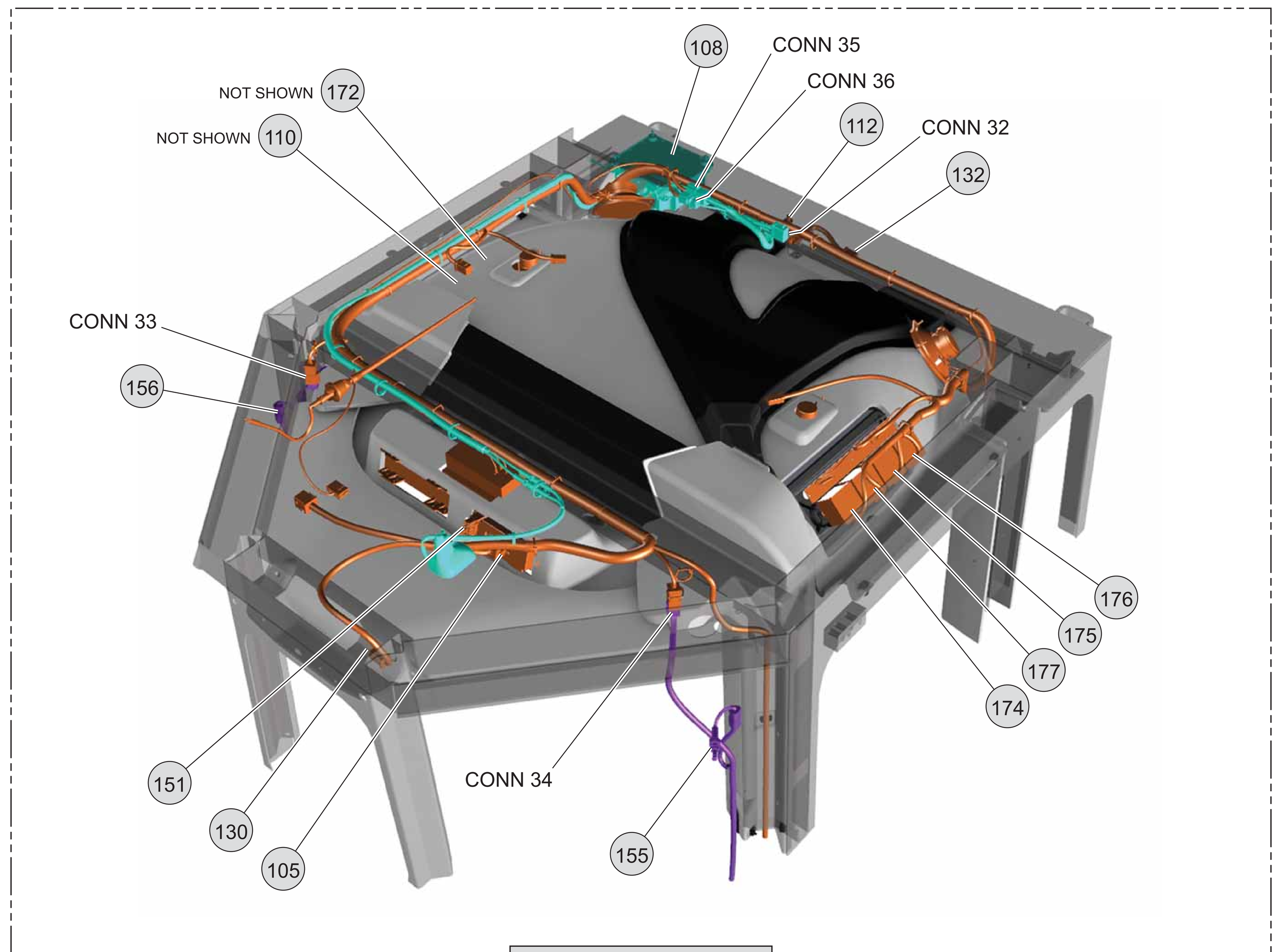

HEADLINER WIRING

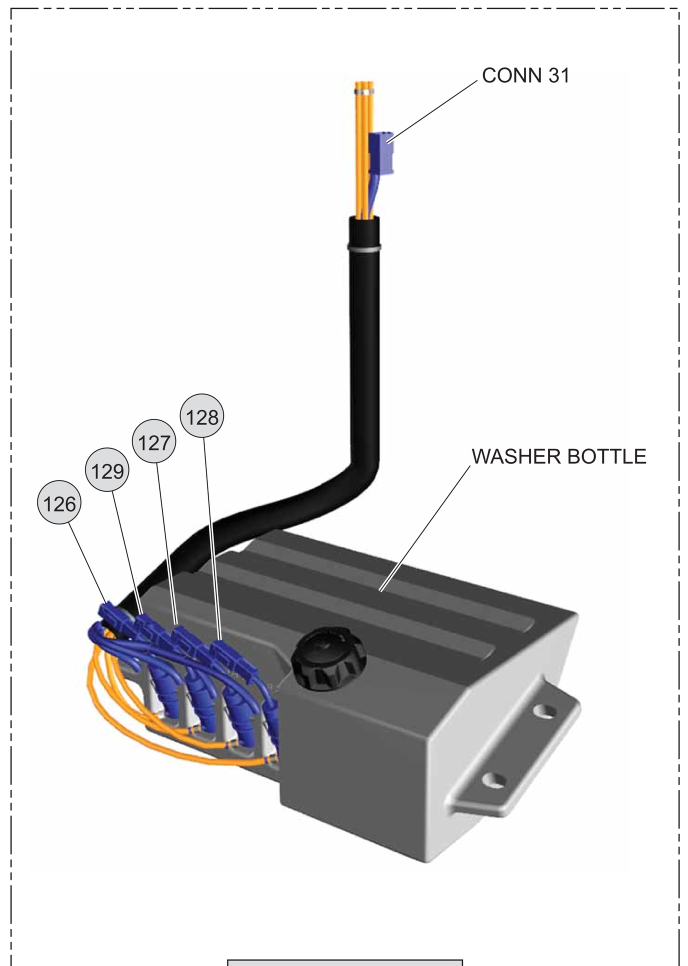

WASHER WIRING

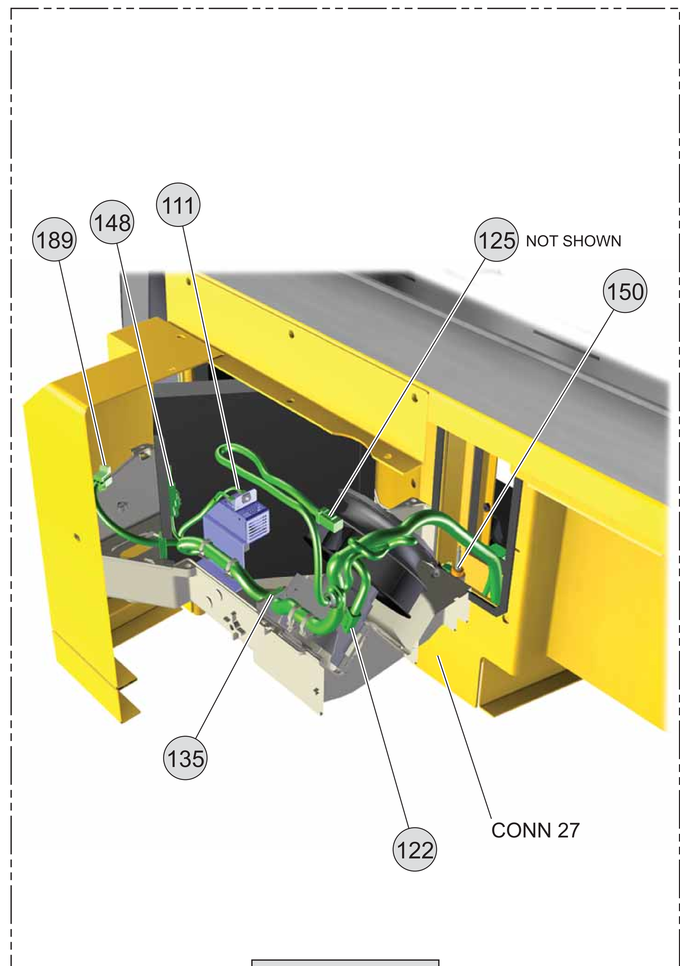

HVAC WIRING

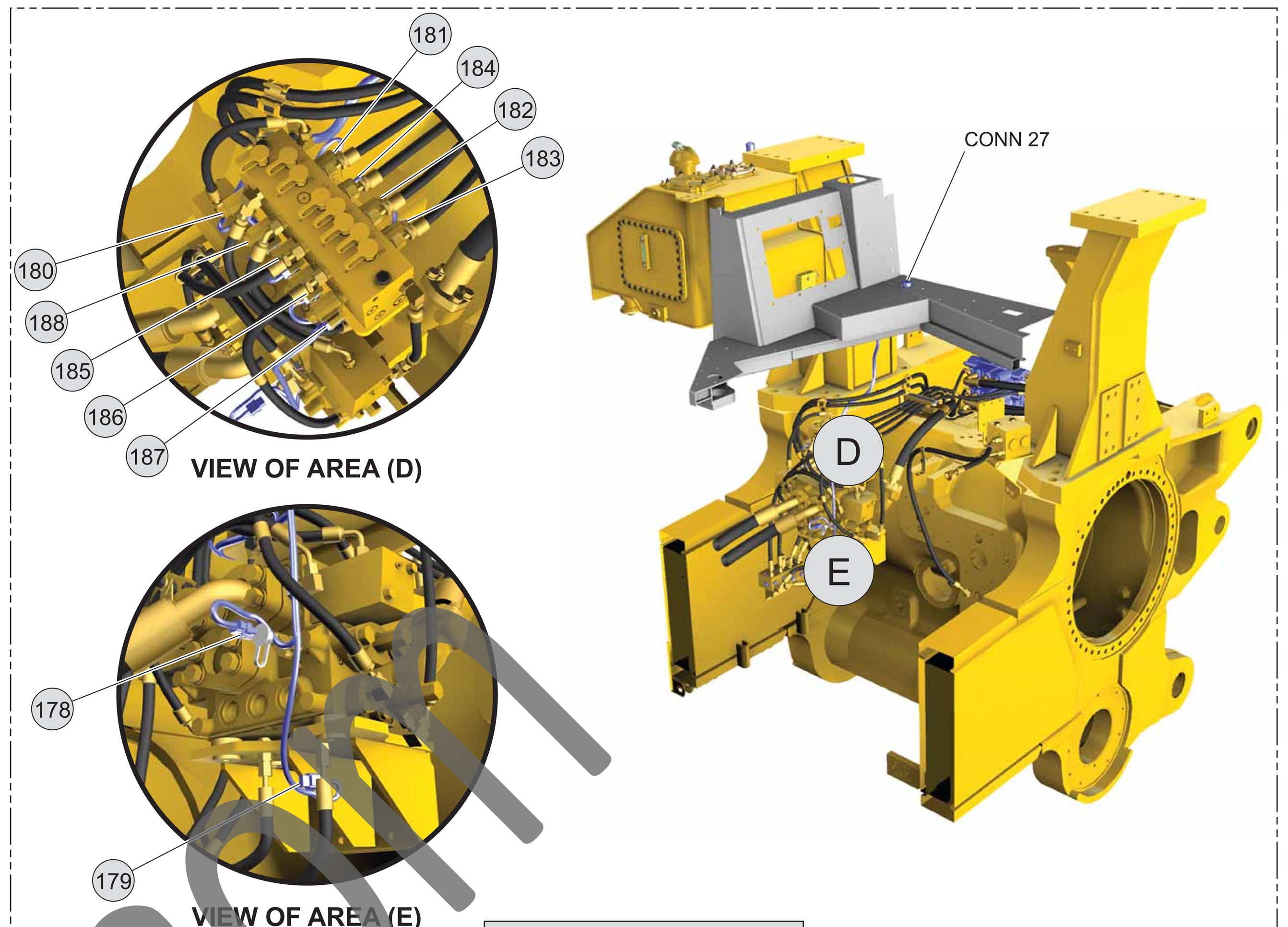

PILOT MANIFOLD WIRING

CATERPILLAR®

KENR5626-05
August 2014

Schematic

D11T Track-Type Tractor Electrical System

JEL1-UP
JNS1-UP

Volume 2 of 3: Cab Wiring

© 2014 Caterpillar, All Rights Reserved Printed in U.S.A.

KENR5626-05 VOL 2 of 3
42 Page, (Dimensions: 56 inches x 35 inches)

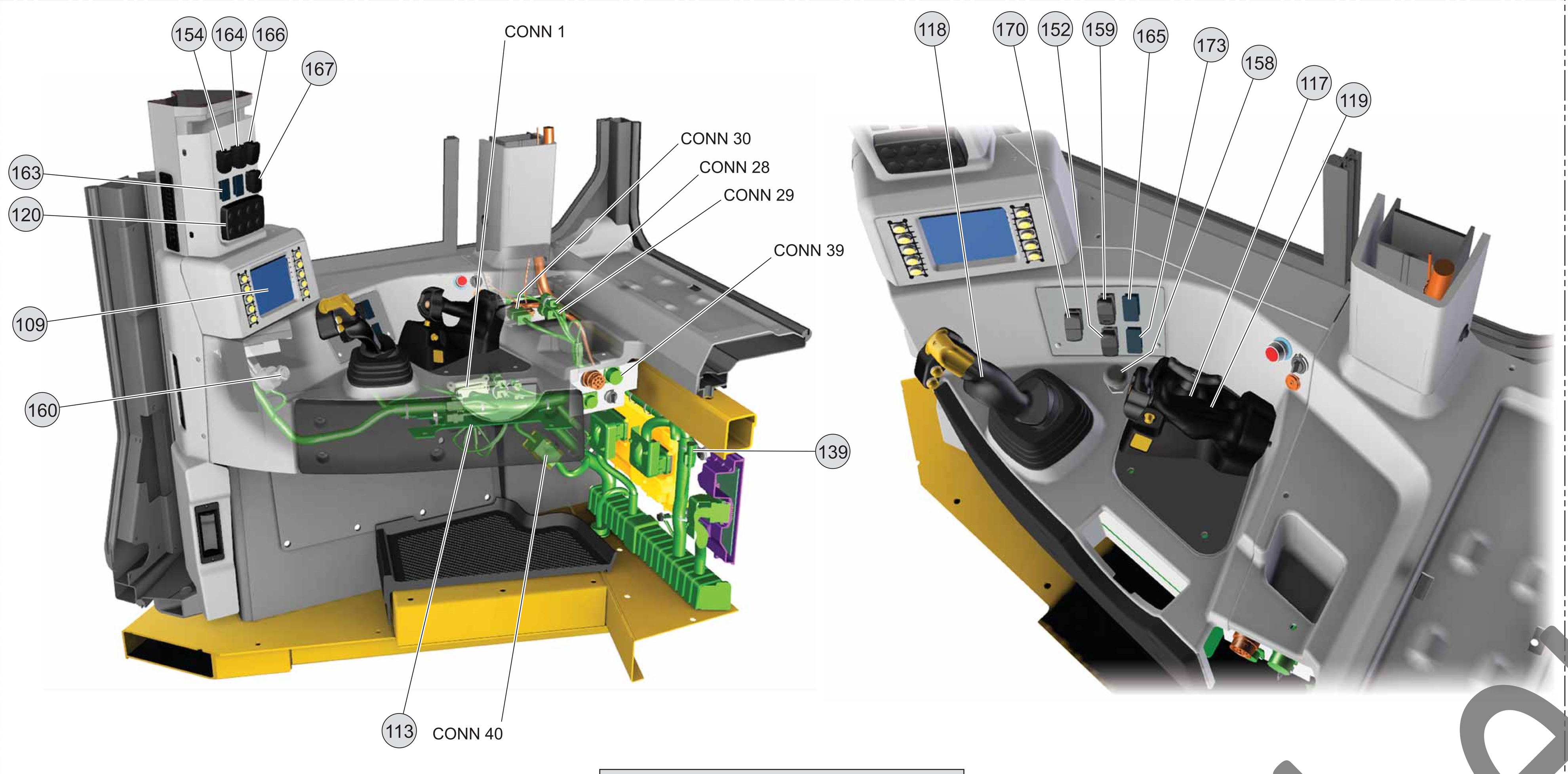

PLATFORM WIRING (RH CONSOLE)

Component	Schematic Location	Machine Location	Component	Schematic Location	Machine Location
20A Converter	C-13	98	Sensor - Steering Lever Position (RH)	H-6	147
24V/12V Converter	F-1	99	Sensor - Temperature (Evaporating Freeze)	J-12	148
Alarm - Action	G-1	100	Sensor - Temperature (Louver)	I-14	149
Alarm - CAES	C-2	101	Sensor - Temperature (Recirculating Filter)	J-12	150
Battery - Backup	E-1	102	Switch - A/C	D-9	151
Block - Fuse	J-11	103	Switch - Auto Kickdown	D-7	152
Control - CAES	E-1	104	Switch - Console (Raise/Lower)	I-6	153
Control - HVAC Panel	C-9	105	Switch - Cylinder Light	C-8	154
Control - Implement	D-16	106	Switch - Door (LH)	C-9	155
Control - Powertrain	H-16	107	Switch - Door (RH)	B-9	156
Control - Product Link	F-10	108	Switch - Downshift	I-6	157
Display - Advisor	B-3	109	Switch - Forward	I-6	142
Display - WAVS Video	B-12	110	Switch - Forward Horn	B-6	158
Fuse - Thermal	J-12	111	Switch - Implement Lockout	C-7	159
Ground - Cab	D-11	112	Switch - Key	B-6	160
Ground - Console (RH)	A-5	113	Switch - Operator Present	D-13	161
Ground - Dash	H-2	114	Switch - Parking Brake	J-6	162
Ground - Rear (Center)	F-14	115	Switch - Reverse	I-6	144
Ground - Rear (Left)	I-14	116	Switch - Reversing Fan	D-8	163
Handle - Auto Ripper	A-7	117	Switch - Ripper Light (Fender)	C-8	164
Handle - Implement Control	B-7	118	Switch - Ripper Pin Puller	C-7	165
Handle - Ripper Control	A-7	119	Switch - ROPS HID (Forward)	B-8	166
Keypad	D-7	120	Switch - ROPS HID (Rear)	B-8	167
Module - Indicator	H-1	121	Switch - Seat	D-13	168
Motor - Blower	J-14	122	Switch - Service Brake	G-1	169
Motor - Compressor	D-13	123	Switch - Throttle	B-6	170
Motor - Console (Raise/Lower)	I-5	124	Switch - Upshift	J-6	171
Motor - Pressurizer	J-11	125	Switch - WAVS	B-11	172
Motor - Washer (Front)	C-13	126	Switch - Winch Lockout	D-7	173
Motor - Washer (Left)	C-13	127	Switch - Wiper (Front)	D-11	174
Motor - Washer (Rear)	C-13	128	Switch - Wiper (Left)	D-11	175
Motor - Washer (Right)	C-13	129	Switch - Wiper (Rear)	C-11	176
Motor - Wiper (Front)	B-9	130	Switch - Wiper (Right)	C-11	177
Motor - Wiper (Left)	B-9	131	Valve - Pilot Manifold	B-13	
Motor - Wiper (Rear)	C-9	132	Sensor - Pump Pressure (Main)	B-13	178
Motor - Wiper (Right)	B-9	133	Sensor - Pump Pressure (Tilt)	B-13	179
Relay - Main	J-10	134	Solenoid - Blade (Lower)	A-13	180
Resistor - Blower	J-12	135	Solenoid - Blade (Raise)	A-13	181
Resistor - CAN	F-1	136	Solenoid - Blade (Tilt Left)	A-13	182
Resistor - HVAC	A-16	137	Solenoid - Blade (Tilt Right)	A-13	183
Resistor - Terminating A1	B-11	138	Solenoid - PCO/Ripper	B-13	184
Resistor - Terminating Hourmeter	A-16	139	Solenoid - Ripper (Lower)	A-13	185
Sensor - Decel Pedal	G-1	140	Solenoid - Ripper (Raise)	A-13	186
Sensor - ENR	H-6	141	Solenoid - Ripper (Shank In)	B-13	187
Sensor - Inclination	G-1	143	Solenoid - Ripper (Shank Out)	A-13	188
Sensor - Service Brake Pedal	G-1	145	Valve, Water (HVAC)	J-12	189
Sensor - Steering Lever Position (LH)	H-6	146			

Component Location (Volume 2)

Connector Number	Schematic Location
CONN 1	D-3
CONN 2	G-13
CONN 3	I-1
CONN 26	A-14
CONN 27	J-14
CONN 28	A-11
CONN 29	A-11
CONN 30	A-11
CONN 31	B-11
CONN 32	E-11
CONN 33	B-10
CONN 34	B-10
CONN 35	D-10
CONN 36	D-10
CONN 37	H-7
CONN 38	I-7
CONN 39	A-6
CONN 40	A-5
CONN 41	D-2, F-1
CONN 42	D-2, F-1

Connector Location (Volume 2)

The connectors shown in this chart are for harness to harness connectors. Connectors that join a harness to a component are generally located at or near the component. See the Component Location Chart.

Resistor & Solenoid Specifications

Part No.	Component Description		Resistance (Ohms)[1]
134-2540	Resistor:	HVAC, Hourmeter, CAN A Datalink #1, CAN C Datalink #1, CAN C Datalink #2	120 ± 12
174-4916	Solenoid:	Blade Lower, Tilt Rack, Ripper Raise, Ripper Shank (Out), Blade (Raise),Blade Tilt (Dump), Ripper (Lower), Ripper Shank (In)	8.7 ± 0.4
228-4982	Resistor:	HVAC Water Valve	150 ± 7.5
257-5029	Resistor:	HVAC Blower	Low - Med1 1.3 Med1 - Med2 0.8 Med2 - High 0.4

[1] At room temperature unless otherwise noted.

Harness And Wire Electrical Schematic Symbols

Symbols

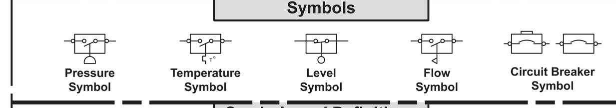

Symbols and Definitions

Fuse: A component in an electrical circuit that will open the circuit if too much current flows through it.

Switch (Normally Open): A switch that will close at a specified point (temp, press, etc.). The circle indicates that the component has screw terminals and a wire can be disconnected from it.

Switch (Normally Closed): A switch that will open at a specified point (temp, press, etc.). No circle indicates that the wire cannot be disconnected from the component.

Ground (Wired): This indicates that the component is connected to a grounded wire. The grounded wire is fastened to the machine.

Ground (Case): This indicates that the component does not have a wire connected to ground. It is grounded by being fastened to the machine.

Reed Switch: A switch whose contacts are controlled by a magnet. A magnet closes the contacts of a normally open reed switch; it opens the contacts of a normally closed reed switch.

Sender: A component that is used with a temperature or pressure gauge. The sender measures the temperature or pressure. Its resistance changes to give an indication to the gauge of the temperature or pressure.

Relay (Magnetic Switch): A relay is an electrical component that is activated by electricity. It has a coil that makes an electromagnet when current flows through it. The electromagnet can open or close the switch part of the relay.

Solenoid: A solenoid is an electrical component that is activated by electricity. It has a coil that makes an electromagnet when current flows through it. The electromagnet can open or close a valve or move a piece of metal that can do work.

Magnetic Latch Solenoid: A magnetic latch solenoid is an electrical component that is activated by electricity and held latched by a permanent magnet. It has two coils (latch and unlatch) that make electromagnet when current flows through them. It also has an internal switch that places the latch coil circuit open at the time the coil latches.

Harness and Wire Symbols

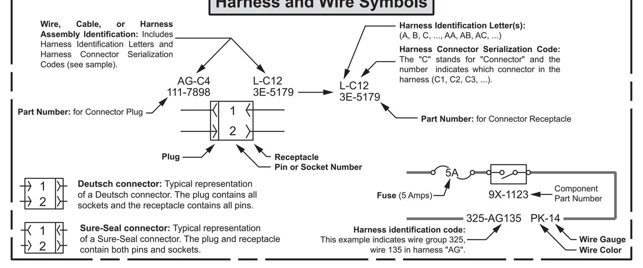

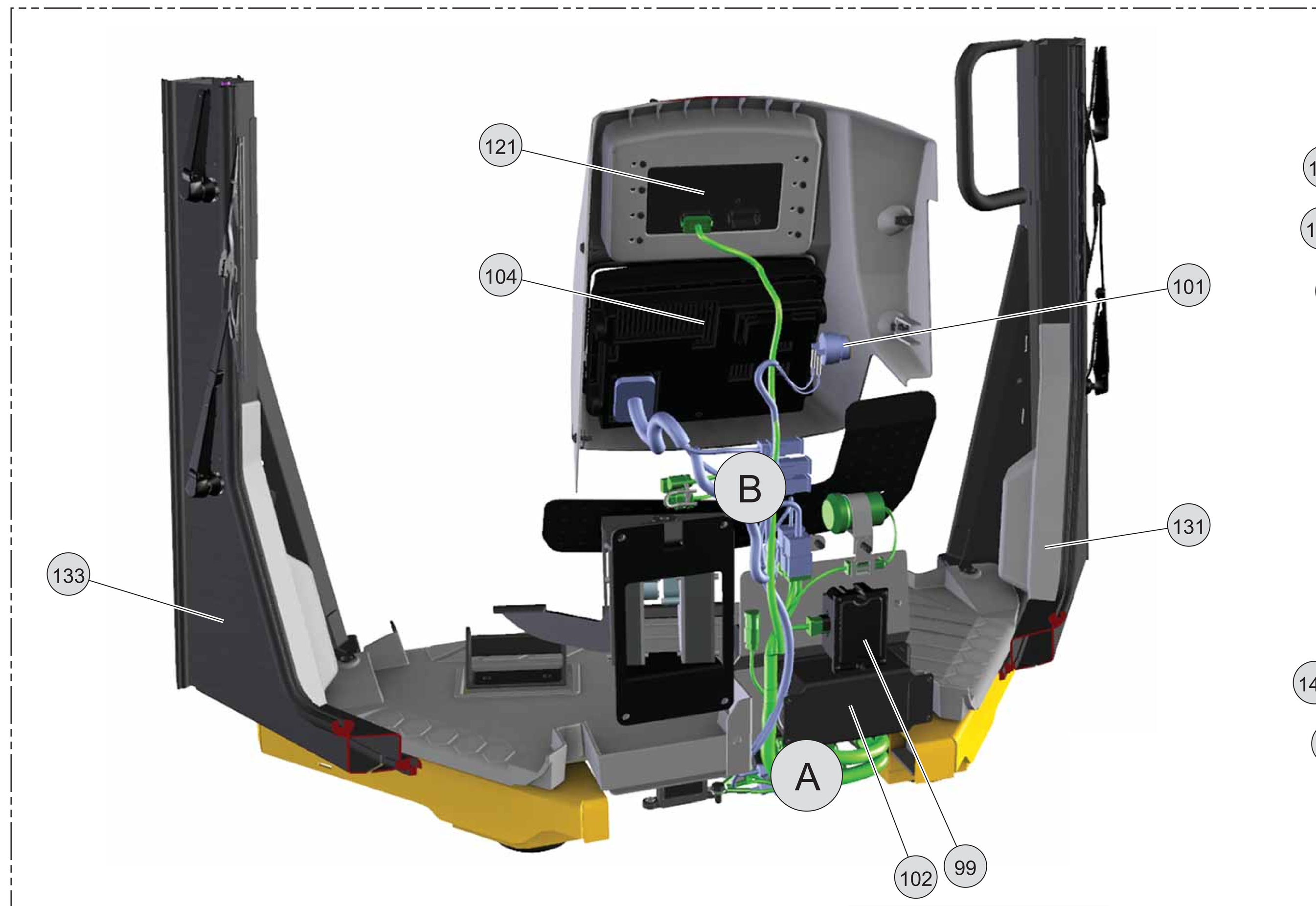

CAB DASH WIRING

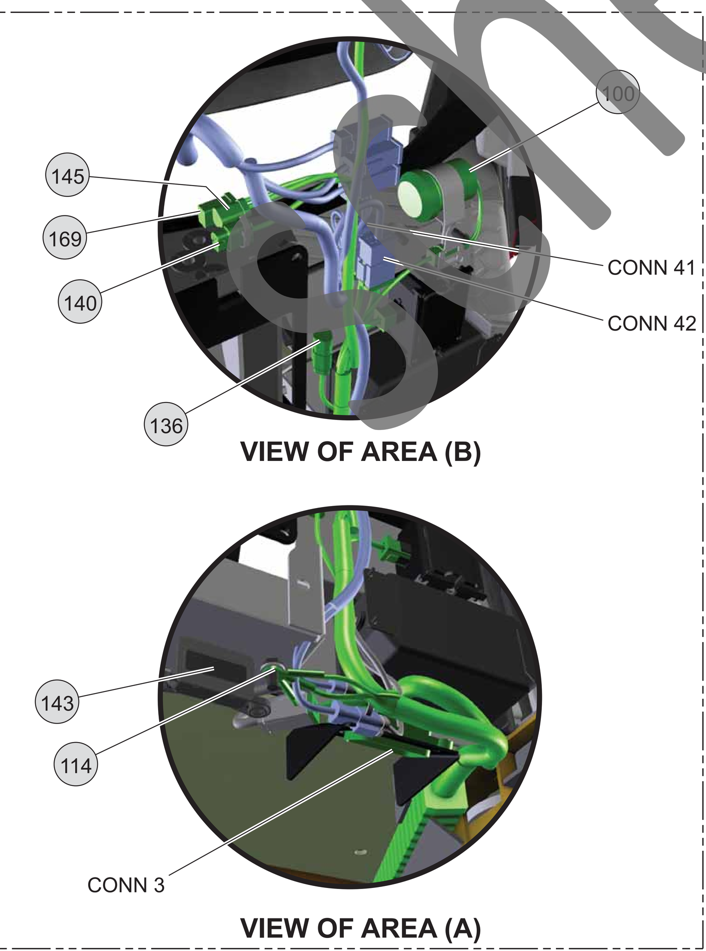

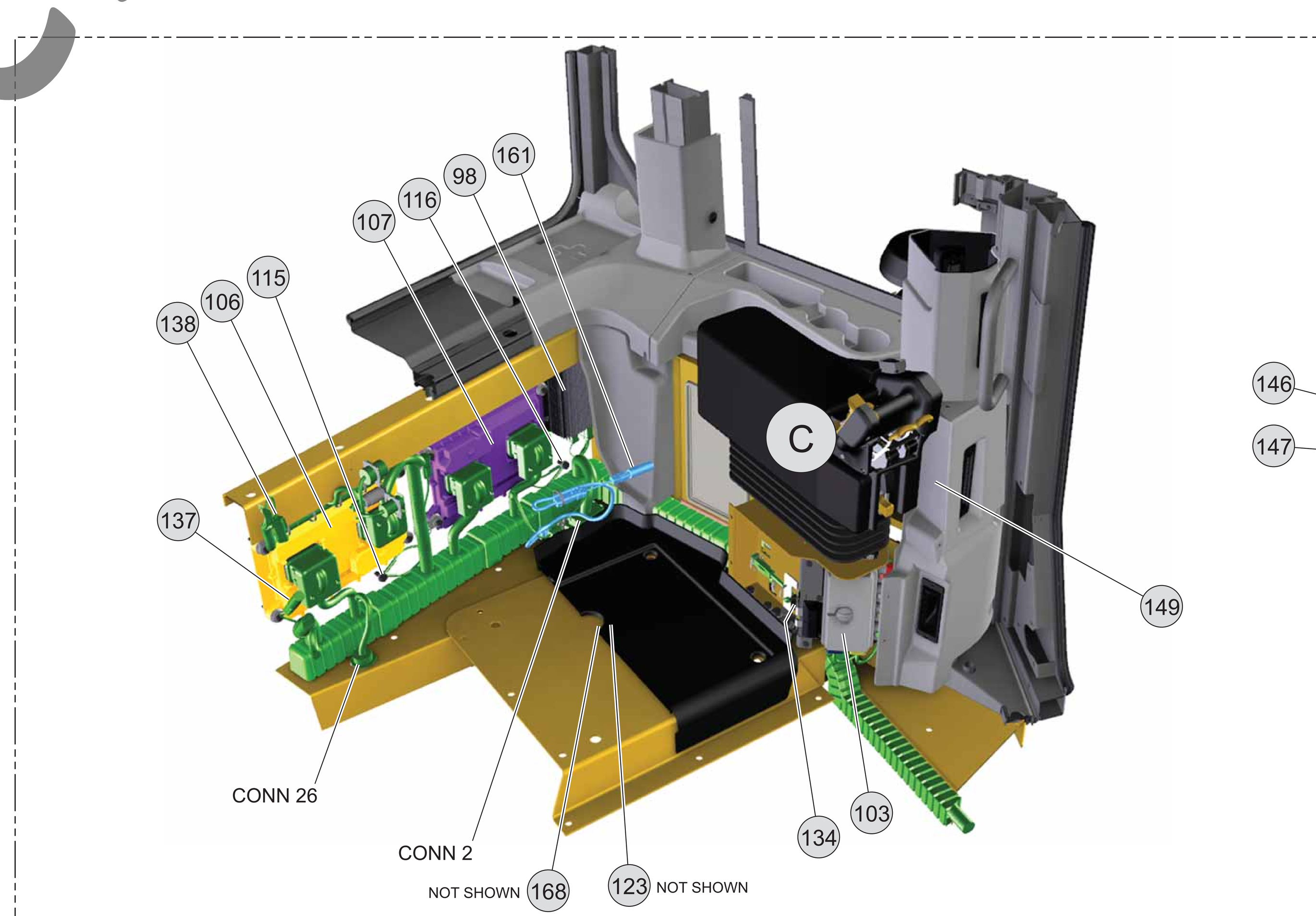

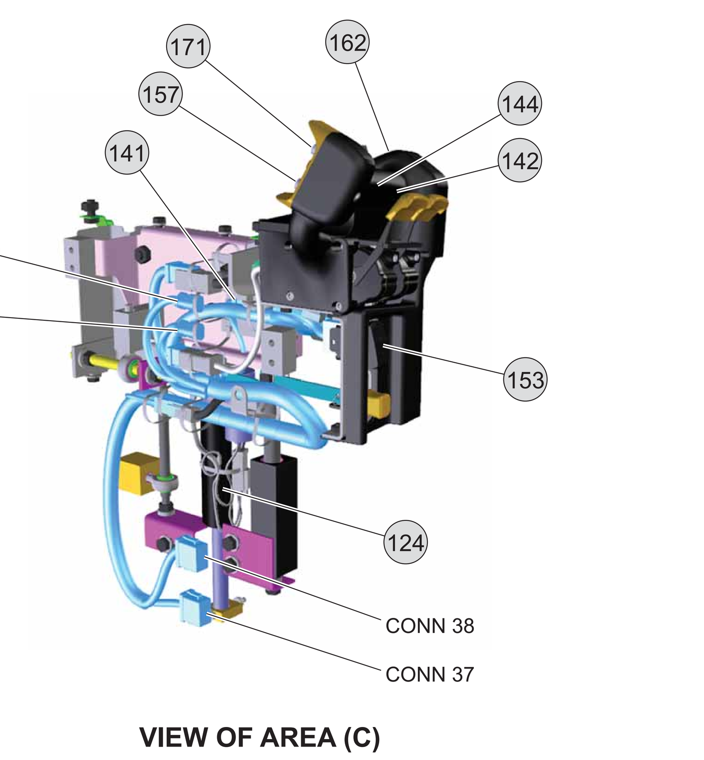

PLATFORM WIRING (LH CONSOLE)

Related Electrical Service Manuals

Title		Form Number
Alternator:	272-1889	SENR4130
Starting Motor:	296-5687	SENR3860
Power Train / Implement Control:		KENR8685
VIMS™ 3G / Product Link:		KENR8958
Engine Control:		KENR9197

schematicat.com

KENR5626-05 VOL 2 of 3

42 Page, (Dimensions: 56 inches x 35 inches)

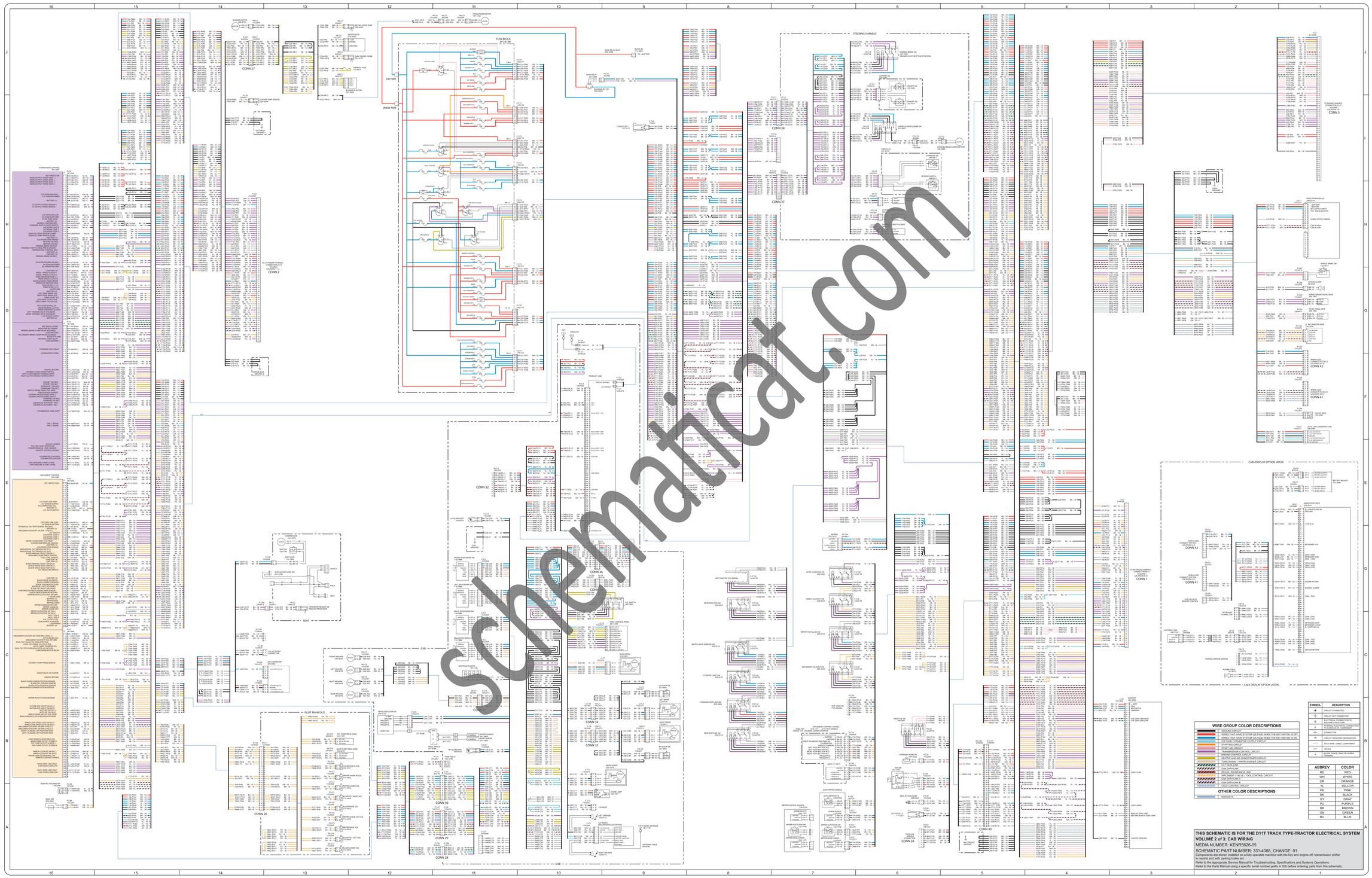

schematicat.com

WIRE GROUP COLOR DESCRIPTIONS

- WIRES THAT HAVE STEADY VOLTAGE WHEN THE KEY SWITCH IS ON
- WIRES THAT HAVE SYSTEM VOLTAGE WHEN THE KEY SWITCH IS OFF
- WIRES THAT HAVE SYSTEM VOLTAGE WHEN THE KEY SWITCH IS ON
- VOLTAGE CHANGE BY OUTPUT CIRCUIT
- STARTING CIRCUIT
- EXHAUST AID CIRCUIT
- TRANSMISSION CONTROL CIRCUIT
- ENGINE CONTROL CIRCUIT
- HEATER AND AIR CONDITIONER CIRCUIT
- TURN SIGNAL / WIPER WASHER CIRCUIT
- CAT DATA LINK
- CAN DATA LINK
- RS-232 TRANSDUCER LINK
- IMPLEMENT VALVE / TOOL CONTROL CIRCUIT
- CAN DATA LINK A
- CAN DATA LINK B
- CAES CONTROL CIRCUIT

OTHER COLOR DESCRIPTIONS

- HIGHWAYS

SYMBOL	DESCRIPTION
	CIRCUIT CONNECTED
	CIRCUIT NOT CONNECTED
	ELECTRICAL CONNECTION TO MACHINE CHASSIS
	INTERNAL ELECTRICAL CONNECTION BETWEEN COMPONENTS
	CONNECTOR
DR	CIRCUIT GROUPING DESIGNATION
	ATCH WIRE, CABLE, COMPONENT
	FUSE
	BLADE, WIRE, RING OR SCREW TERMINAL

ABBREV	COLOR
RD	RED
WH	WHITE
OR	ORANGE
YL	YELLOW
PK	PINK
BK	BLACK
GY	GRAY
PU	PURPLE
BR	BROWN
GN	GREEN
BU	BLUE

THIS SCHEMATIC IS FOR THE D11T TRACK TYPE-TRACTOR ELECTRICAL SYSTEM
VOLUME 2 of 3: CAB WIRING
MEDIA NUMBER: KENR5626-05
SCHEMATIC PART NUMBER: 331-4068, CHANGE: 01
Schematic is shown with machine at a fully operable machine with the key and engine off, transmission shifter in neutral and with parking brake set.
Refer to the appropriate Service Manual for Troubleshooting, Specifications and Systems Operations.
Refer to the Parts Manual using a specific serial number prefix in S/S before ordering parts from this schematic.

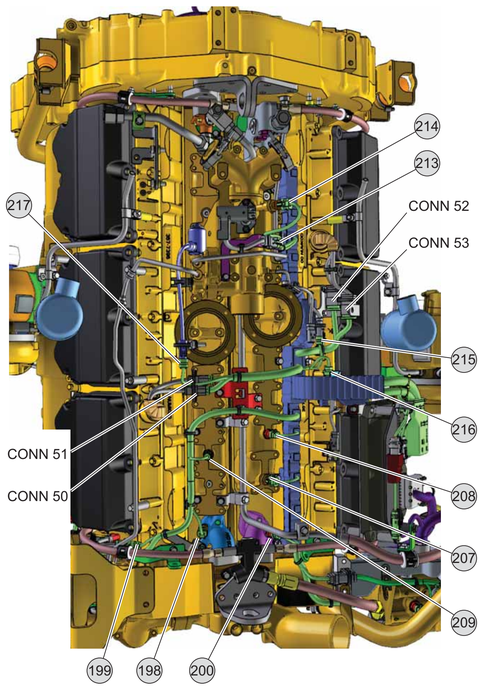

ENGINE TOP SIDE VIEW

Related Electrical Service Manuals	
Title	Form Number
Control: Engine	KENR9790

Off-Machine Switch Specification

Part No.	Function	Actuate	Deactuate	Contact Position
275-1253	Fuel Differential Pressure	110.3 ± 13.8 kPa (16 ± 2 psi)	69 kPa MIN (10 psi MIN)	Normally Closed

Resistor, Sender and Solenoid Specifications

Part No.	Component Description	Resistance (Ohms)*
134-2540	Resistor: CAN	120 ± 12
342-0636	Solenoid: NRS Valve Actuator	2.95 ± 0.2
344-6041	Solenoid: NRS Flow Balance Valve Actuator Down	235

* At room temperature unless otherwise noted.

Component Location

Component	Schematic Location	Machine Location
Control - Engine	D-7	195
Module - Aftertreatment ID	C-5	196
Resistor - Engine CAN	D-4	197
Sensor - Barometric Pressure	D-4	198
Sensor - Engine Speed (Cam)	C-5	199
Sensor - Coolant Temperature	E-4	200
Sensor - Engine Speed (Crank)	C-5	201
Sensor - Engine Oil Pressure	E-4	202
Sensor - Exhaust Temperature LH	C-4	203
Sensor - Exhaust Temperature RH	C-4	204
Sensor - Fuel Pressure After Filter	E-3	205
Sensor - Fuel Temperature	E-3	206
Sensor - Intake Manifold Pressure LH	E-4	207
Sensor - Intake Manifold Temperature LH	E-4	208
Sensor - Intake Manifold Temperature RH	E-4	209
Sensor - Low Engine Oil Level Off/Full	D-4	210
Sensor - Low Engine Oil Level Running	D-4	211
Sensor - Low Engine Oil Level Safe To Start	D-4	212
Sensor - NRS Differential Pressure	D-4	213
Sensor - NRS Intake Pressure	D-4	214
Sensor - NRS Temperature	D-4	215
Solenoid - NRS Flow Balance Valve Actuator Down	D-4	216
Solenoid - NRS Valve Actuator	C-5	217
Solenoids - Injector 1 - 12	C-1 , D-1	218
Switch - Fuel Differential Pressure	E-2	219

Connector Location

Connector Number	Schematic Location
CONN 19	B-7
CONN 50	C-3
CONN 51	C-3
CONN 52	C-3
CONN 53	B-3
CONN 54	E-4

The connectors shown in this chart are for harness to harness connectors. Connectors that join a harness to a component are generally located at or near the component. See the Component Location Chart.

CATERPILLAR®

KENR5626-05
August 2014

Schematic

D11T Track-Type Tractor Electrical System

JEL1-UP
JNS1-UP

Volume 3 of 3: Engine Wiring

© 2014 Caterpillar. All Rights Reserved

Printed in U.S.A.

Schematicat.com

Harness And Wire Electrical Schematic Symbols

Symbols

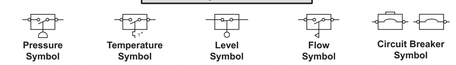

Symbols and Definitions

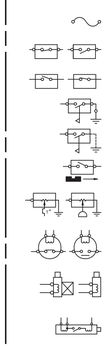

Fuse: A component in an electrical circuit that will open the circuit if too much current flows through it.

Switch (Normally Open): A switch that will close at a specified point (temp, press, etc.). The circle indicates that the component has screw terminals and a wire can be disconnected from it.

Switch (Normally Closed): A switch that will open at a specified point (temp, press, etc.). No circle indicates that the wire cannot be disconnected from the component.

Ground (Wired): This indicates that the component is connected to a grounded wire. The grounded wire is fastened to the machine.

Ground (Case): This indicates that the component does not have a wire connected to ground. It is grounded by being fastened to the machine.

Reed Switch: A switch whose contacts are controlled by a magnet. A magnet closes the contacts of a normally open reed switch; it opens the contacts of a normally closed reed switch.

Sender: A component that is used with a temperature or pressure gauge. The sender measures the temperature or pressure. Its resistance changes to give an indication to the gauge of the temperature or pressure.

Relay (Magnetic Switch): A relay is an electrical component that is activated by electricity. It has a coil that makes an electromagnet when current flows through it. The electromagnet can open or close the switch part of the relay.

Solenoid: A solenoid is an electrical component that is activated by electricity. It has a coil that makes an electromagnet when current flows through it. The electromagnet can open or close a valve or move a piece of metal that can do work.

Magnetic Latch Solenoid: A magnetic latch solenoid is an electrical component that is activated by electricity and held latched by a permanent magnet. It has two coils (latch and unlatch) that make electromagnet when current flows through them. It also has an internal switch that places the latch coil circuit open at the time the coil latches.

Harness and Wire Symbols

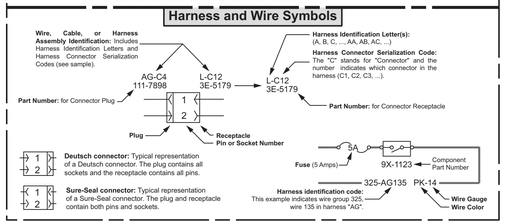

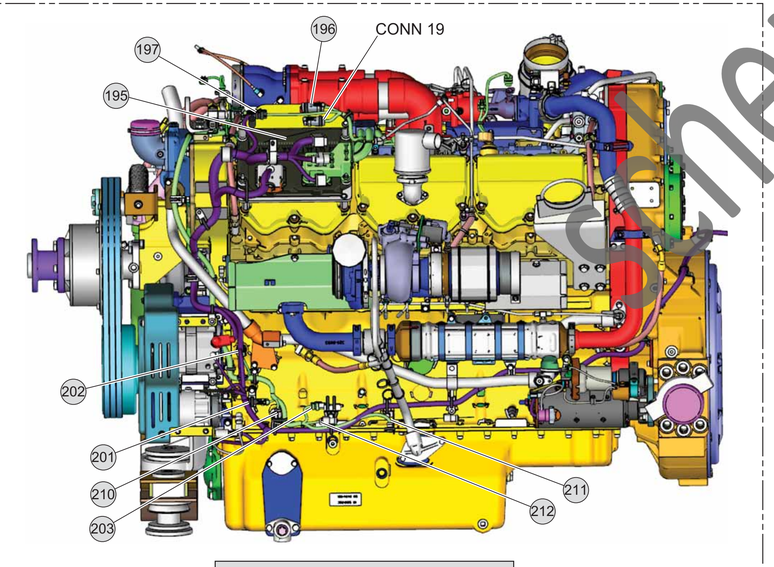

ENGINE LEFT SIDE VIEW

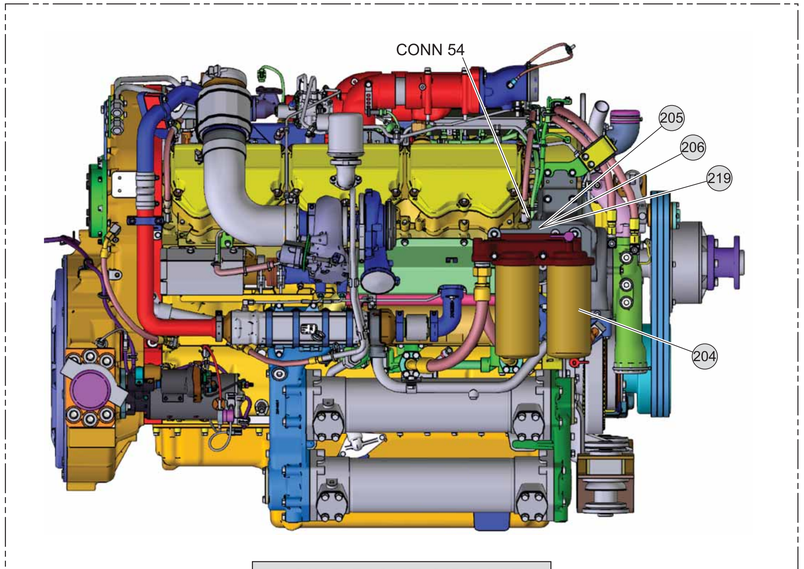

ENGINE RIGHT SIDE VIEW

KENR5626-05 VOL 3 of 3
16 Page, (Dimensions: 34 inches x 24 inches)

KENR5626-05 VOL 3 of 3

16 Page, (Dimensions: 34 inches x 24 inches)

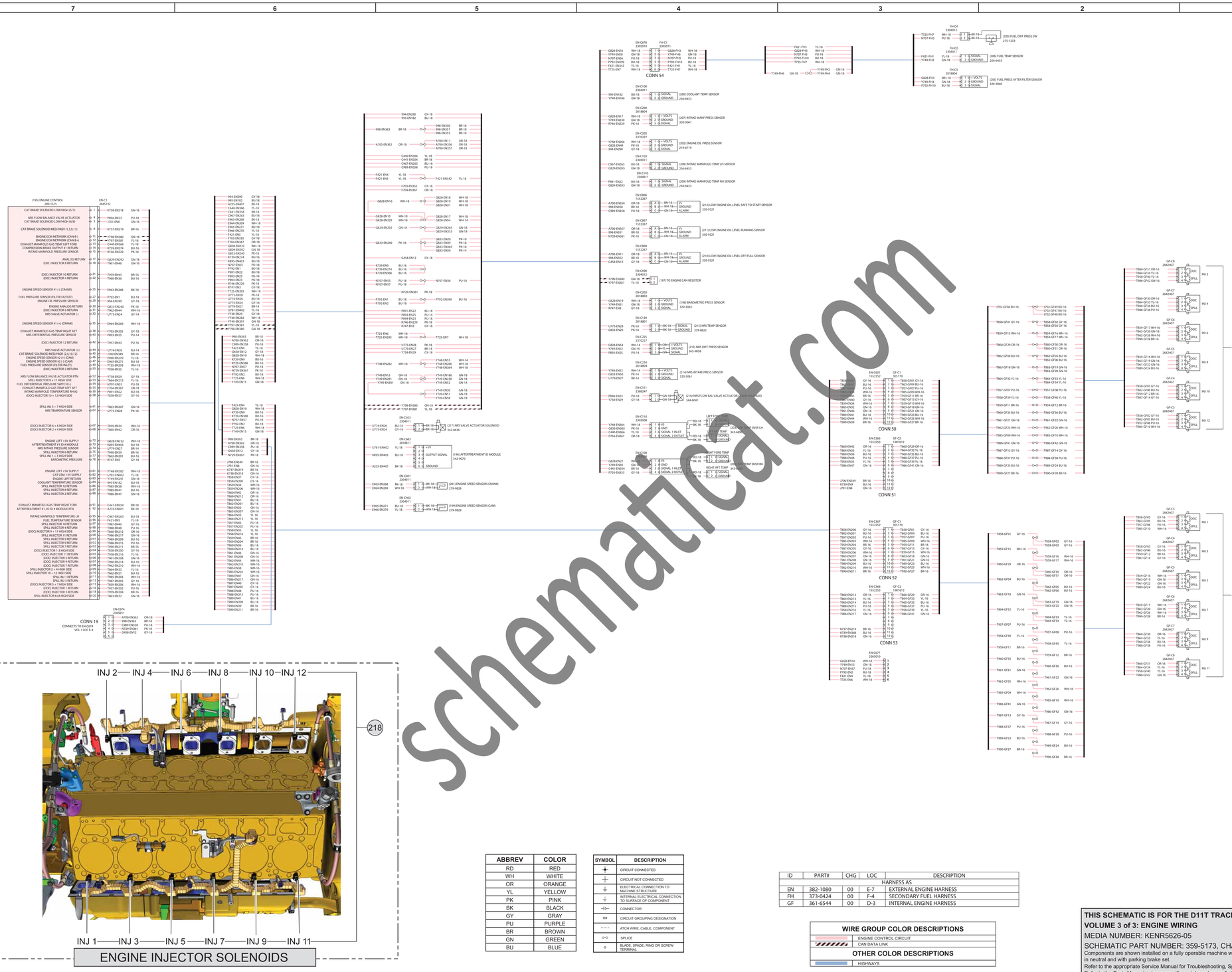

schematic.com

ABBREV	COLOR
RD	RED
WH	WHITE
OR	ORANGE
YL	YELLOW
PK	PINK
BK	BLACK
GY	GRAY
PU	PURPLE
BR	BROWN
GN	GREEN
BU	BLUE

SYMBOL	DESCRIPTION
	CIRCUIT CONNECTED
	CIRCUIT NOT CONNECTED
	ELECTRICAL CONNECTION TO MACHINE STRUCTURE
	INTERNAL ELECTRICAL CONNECTION TO SURFACE OF COMPONENT
	CONNECTOR
H#	CIRCUIT GROUPING DESIGNATION
	ATCH WIRE, CABLE, COMPONENT
	SPLICE
	BLADE, SPADE, RING OR SCREW TERMINAL

ID	PART#	CHG	LOC	DESCRIPTION
				HARNESS AS
EN	382-1080	00	E-7	EXTERNAL ENGINE HARNESS
FH	373-0424	00	F-4	SECONDARY FUEL HARNESS
GF	361-6544	00	D-3	INTERNAL ENGINE HARNESS

WIRE GROUP COLOR DESCRIPTIONS

- ENGINE CONTROL CIRCUIT
- CAN DATA LINK

OTHER COLOR DESCRIPTIONS

- HIGHWAYS

THIS SCHEMATIC IS FOR THE D11T TRACK-TYPE TRACTOR ELECTRICAL SYSTEM
VOLUME 3 of 3: ENGINE WIRING

MEDIA NUMBER: KENR5626-05

SCHEMATIC PART NUMBER: 359-5173, CHANGE: 02, VERSION: -

Components are shown installed on a fully operable machine with the key and engine off, transmission shifter in neutral and with parking brake set.

Refer to the appropriate Service Manual for Troubleshooting, Specifications and Systems Operations.

Refer to the Parts Manual using a specific serial number prefix in SIS before ordering parts from this schematic.