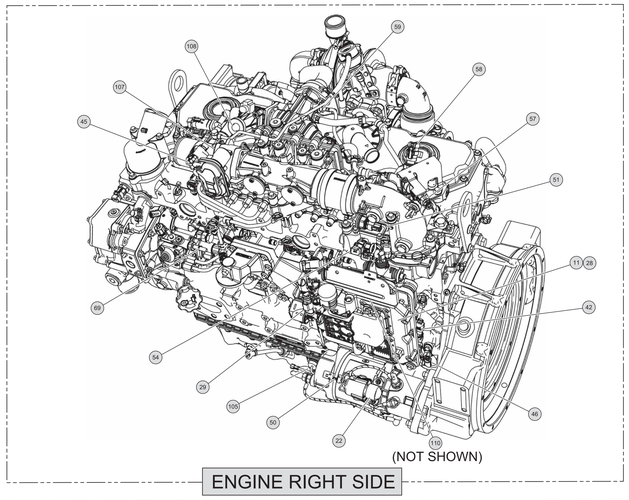

ENGINE RIGHT SIDE

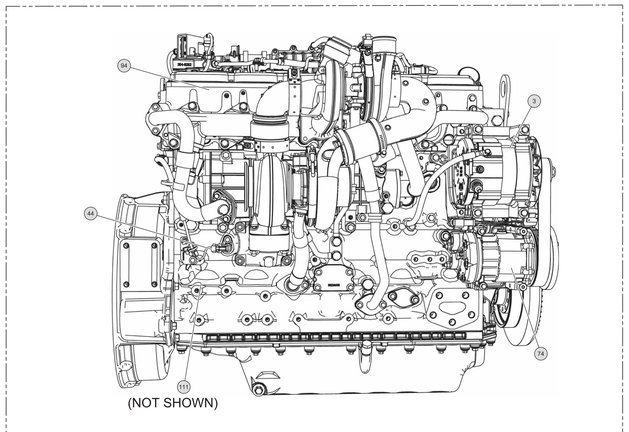

ENGINE LEFT SIDE

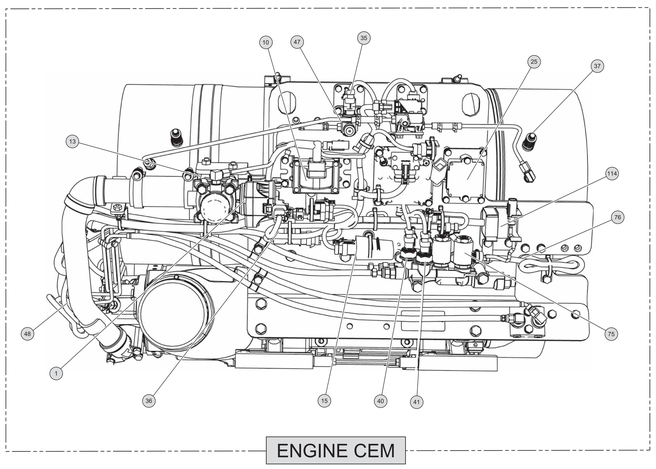

ENGINE CEM

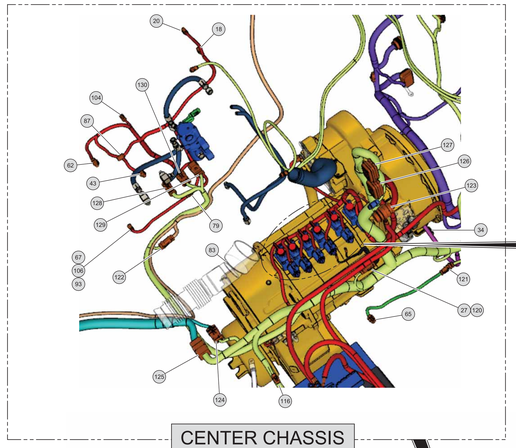

CENTER CHASSIS

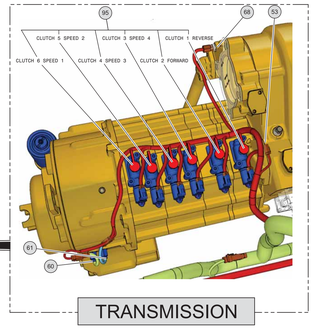

TRANSMISSION

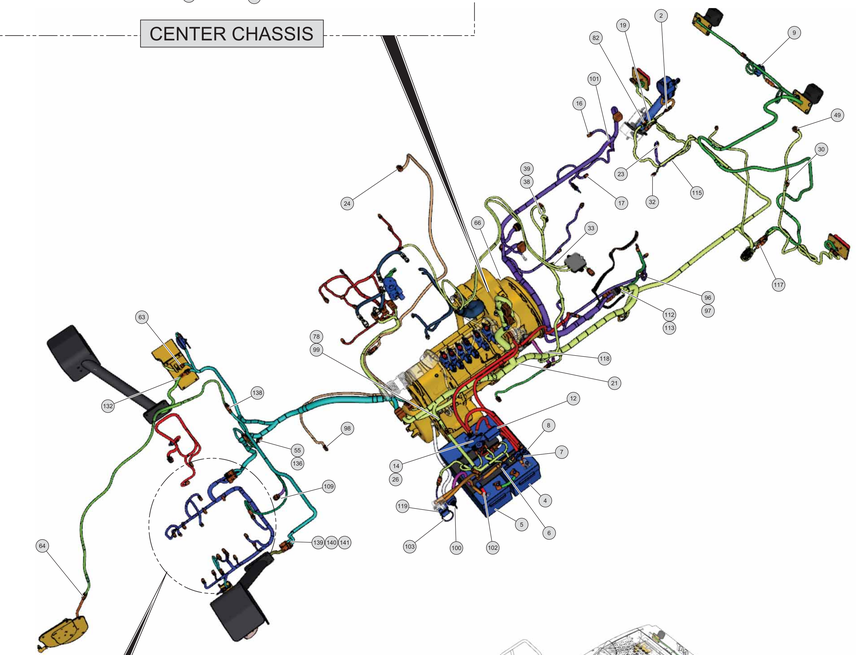

CHASSIS

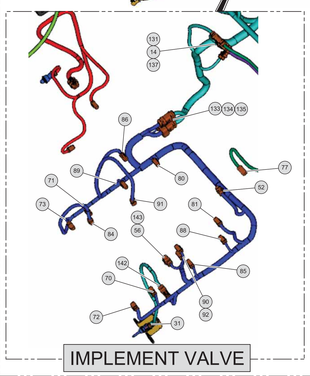

IMPLEMENT VALVE

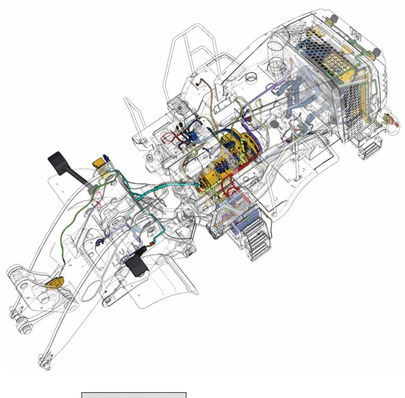

Volume 1 - Component Location					
Component	Schematic Location	Machine Location	Component	Schematic Location	Machine Location
Actuator - ARD Air Flow Control	1-17	1	Sensor - Lift Cylinder Rod End Pressure	G-1	56
Alarm - Backup	I-15	2	Sensor - NRS Differential Pressure	F-16	57
Alternator	B-13	3	Sensor - NRS Intake Pressure	F-16	58
Battery - 1	C-13	4	Sensor - NRS Temperature	F-16	59
Battery - 2	C-13	5	Sensor - Output Speed 1	K-11	60
Breaker - Engine Control	C-11	6	Sensor - Output Speed 2	K-11	61
Breaker - Glow Plug	C-11	7	Sensor - Park Brake Pressure	D-2	62
Breaker - Main	B-11	8	Sensor - Rotary Lift Position	H-3	63
Camera - Rear View	H-15	9	Sensor - Rotary Tilt Position	K-2	64
Coil - ARD Ignition Transformer Primary	J-17	10	Sensor - Steering Pump Oil Pressure 1	E-11	65
Control - Engine	E-18	11	Sensor - Steering Pump Oil Pressure 2	E-11	65
Control - Hood Raise/Lower	J-15	12	Sensor - Torque Converter Temperature	A-15	66
Heater - ARD Fuel Nozzle	J-18	13	Sensor - Transmission Oil Pressure	D-4	67
Junction Block	C-13	14	Sensor - Transmission Oil Temperature	K-11	68
Module - Aftertreatment ID	K-17	15	Sensor - Water In Fuel	F-15	69
Motor - CRS Fuel Transfer Pump	E-15	16	Solenoid - 3rd Function Port A	H-1	70
Motor - Electric Lift Pump	E-15	17	Solenoid - 3rd Function Port B	H-1	71
Motor - Front Washer	C-3	18	Solenoid - 4TH Function Port A	H-1	72
Motor - Hood Actuator	J-15	19	Solenoid - 4TH Function Port B	H-1	73
Motor - Rear Washer	C-3	20	Solenoid - A/C Clutch	A-15	74
Motor - Secondary Steering	D-11	21	Solenoid - ARD Fuel Press #1 Cont Actuator	K-17	75
Motor - Starter	B-13	22	Solenoid - ARD Fuel Press #2 Cont Actuator	J-17	76
Motor - VYP Compressor	K-16	23	Solenoid - Axle Oil Cooler Clutch	G-2	77
Pump - Autolube	G-11	24	Solenoid - Bellyguard Actuator	L-16	78
Relay - ARD Fuel Nozzle Heater	I-17	25	Solenoid - Demand Speed Fan	B-3	79
Relay - Glow Plug	C-11	26	Solenoid - Dump	I-1	80
Relay - Secondary Steering	D-11	27	Solenoid - Dump Anti-Drift	H-1	81
Resistor - CAN A	A-15	28	Solenoid - Ether Aid	E-11	82
Resistor - CAN Term	C-16	29	Solenoid - Fan Block	D-4	83
Resistor - Engine CAN	H-14	30	Solenoid - Implement Pilot Supply	H-1	84
Sender - Front Axle Oil Temperature	J-1	31	Solenoid - Lower	I-1	85
Sender - Fuel Level	J-15	32	Solenoid - Lower Anti-Drift	I-1	86
Sender - Rear Axle Oil Temperature	E-15	33	Solenoid - Raise	C-3	87
Sender - Rear Axle Oil Temperature	H-15	34	Solenoid - Rackback	J-1	88
Sensor - Aftertreatment 1 Gas Air Press	I-17	35	Solenoid - Raise	I-1	89
Sensor - Aftertreatment Gas DPF In	K-17	36	Solenoid - Ride Control Balance	I-1	90
Sensor - Aftertreatment NRS Temperature	K-17	37	Solenoid - Ride Control Head End Check	I-1	91
Sensor - Air Filter	G-14	38	Solenoid - Ride Control Rod End Check	J-1	92
Sensor - Air Inlet Temperature	G-14	39	Solenoid - Transmission Bypass	D-4	93
Sensor - ARD Fuel Press #1 (Pilot)	K-17	40	Solenoids - Injector (1-6)	B-16, C-16	94
Sensor - ARD Fuel Press #2 (Main)	J-17	41	Solenoids - Transmission	J-11, K-11	95
Sensor - Barometric Pressure	D-10	42	Switch - A/C High / Low Pressure	A-15	96
Sensor - Brake Accumulation Oil Pressure	C-2	43	Switch - A/C Low Pressure	A-15	97
Sensor - Cam Speed	D-16	44	Switch - Autolube Pressure	G-11	98
Sensor - Charge Air Cooler Out Temperature	D-15	45	Switch - Bellyguard Actuator	L-16	99
Sensor - Crank Speed	D-16	46	Switch - Disconnect	D-13	100
Sensor - DPF Intake Pressure	I-17	47	Switch - Fuel Priming Pump	E-14	101
Sensor - DPF Intake Temperature	K-17	48	Switch - Ground Level Shutdown	A-15	102
Sensor - DPF Soot Sensor	H-14	49	Switch - Hood Actuator	K-13	103
Sensor - Engine Oil Pressure	D-16	50	Switch - Hydraulic Filter Bypass	B-3	104
Sensor - Fuel Rail Pressure	C-16	51	Switch - Low Oil Level	D-13	105
Sensor - Implement Pump Discharge Press	J-1	52	Switch - Transmission Filter Bypass	C-3	106
Sensor - Input Speed	L-11	53	Valve - Engine Intake Throttle	F-18	107
Sensor - Intake Air Manifold Pressure	D-16	54	Valve - NRS	D-16	108
Sensor - Lift Cylinder Head End Pressure	J-2	55	Valve Grp - Quick Coupler	K-2	109

Always check component part numbers with Parts Manual for your specific machine.

Volume 1 - Connector Location		
Connector Number	Schematic Location	Machine Location
CONN 1	G-16	110
CONN 2	B-15	111
CONN 3	B-15	112
CONN 4	C-15	113
CONN 5	F-15	114
CONN 6	K-15	115
CONN 7	L-15	116
CONN 8	I-14	117
CONN 9	H-14	118
CONN 10	D-13	119
CONN 11	D-11	120
CONN 12	E-11	121
CONN 13	G-11	122
CONN 14	K-9	123
CONN 15	K-6	124
CONN 16	J-6	125
CONN 17	H-6	126
CONN 18	E-6	127
CONN 19	D-4	128
CONN 20	C-4	129
CONN 21	C-4	130
CONN 22	G-3	131
CONN 23	H-3	132
CONN 24	I-3	133
CONN 25	I-3	134
CONN 26	I-3	135
CONN 27	J-3	136
CONN 28	K-3	137
CONN 29	K-3	138
CONN 30	K-3	139
CONN 31	L-2	140
CONN 32	L-2	141
CONN 33	J-2	142
CONN 34	G-1	143

The connectors shown in this chart are for harness to harness connectors. Connectors that join a harness to a component are generally located at or near the component. See the Component Location Chart.

Off-Machine Switch Specification					
Part No.	Function		Actuate	Deactuate	Contact Position
355-3148	A/C High / Low Pressure	Low	275 kPa MAX (39.9 psi MAX)	170 ± 55 kPa (24.6 ± 7.9 psi)	0-1 and 0-3 Normally Open 0-2 Normally Closed
		High	2800 ± 140 kPa (406.1 ± 20.3 psi)	1700 ± 140 kPa (250.8 ± 20.3 psi)	
149-6371-	A/C Low Pressure		103.4 ± 13.8 kPa (14.9 ± 2 psi)	34.5 ± 7 kPa (5 ± 1 psi)	Normally Open
310-8636	Hydraulic Filter Bypass		497 kPa (72 psi)		Normally Closed

* With increasing pressure the closed condition can be maintained up to 2800 kPa (405 psi), with decreasing pressure the closed condition can be maintained down to 170 kPa (25 psi).

* Contact position at the contacts of the harness connector.

Related Electrical Service Manuals	
Title	Form Number
Alternator: Bosch	SENR3685
Starting Motor: Delco iMT 500	SENR3860
Engine Control:	UENR0635

CATERPILLAR®

UENR5411-02
September 2014

Schematic

950K and 962K Wheel Loader Electrical System

950K:	962K:
R4A2000-UP	T6A1000-UP
J5M1000-UP	FLL400-UP
FER500-UP	X4T483-UP

Volume 1 of 2: Chassis and Engine Wiring

© 2014 Caterpillar, All Rights Reserved

Printed in U.S.A.

UENR5411-02 VOL 1 of 2
42 Page, (Dimensions: 56 inches x 35 inches)

Harness And Wire Electrical Schematic Symbols

Symbols

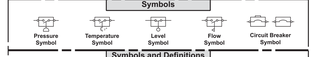

Symbols and Definitions

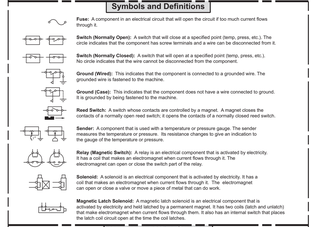

Fuse: A component in an electrical circuit that will open the circuit if too much current flows through it.

Switch (Normally Open): A switch that will close at a specified point (temp, press, etc.). The circle indicates that the component has screw terminals and a wire can be disconnected from it.

Switch (Normally Closed): A switch that will open at a specified point (temp, press, etc.). No circle indicates that the wire cannot be disconnected from the component.

Ground (Wired): This indicates that the component is connected to a grounded wire. The grounded wire is fastened to the machine.

Ground (Case): This indicates that the component does not have a wire connected to ground. It is grounded by being fastened to the machine.

Reed Switch: A switch whose contacts are controlled by a magnet. A magnet closes the contacts of a normally open reed switch; it opens the contacts of a normally closed reed switch.

Sender: A component that is used with a temperature or pressure gauge. The sender contains a variable resistance. As resistance changes to give an indication to the gauge of the temperature or pressure.

Relay (Magnetic Switch): A relay is an electrical component that is activated by electricity. It has a coil that makes an electromagnet when current flows through it. The electromagnet can open or close the switch part of the relay.

Solenoid: A solenoid is an electrical component that is activated by electricity. It has a coil that makes an electromagnet when current flows through it. The electromagnet can open or close a valve or move a piece of metal that can do work.

Magnetic Latch Solenoid: A magnetic latch solenoid is an electrical component that is activated by electricity and held latched by a permanent magnet. It has two coils (latch and unlatch) that make electromagnet when current flows through them. It also has an internal switch that places the latch coil circuit open at the time the coil latches.

Harness and Wire Symbols

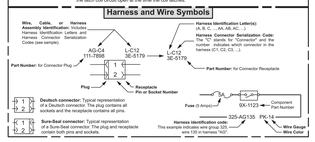

Resistor, Sender and Solenoid Specifications			
Part No.	Component Description		Resistance (Ohms)*
134-2540	Resistor	Cab Fans Engine CAN	120 ± 12
264-4267	Sender	Front Axle Oil Temperature Rear Axle Oil Temperature	-40°C = 33.65k 25°C = 1k 150°C = 18.6
322-7452	Sender	Fuel Level	Full: 33 Half: 103 Empty: 240-250
256-6453	Sender	Hydraulic Oil Temperature	-40°C = 33.65k 25°C = 1k 150°C = 18.6
313-7668	Solenoid	3rd Function Port A and B 4th Function Port A and B Dump Lower Rackback Raise	5 ± 0.3
320-1291	Solenoid	A/C Clutch	17.6 ± 0.6
344-6590	Solenoid	ARD Fuel Press #1 Cont Actuator ARD Fuel Press #2 Cont Actuator	2.01 ± 0.2
241-5959	Solenoid	Axle Oil Cooler Clutch	24 ± 2.1
338-0511	Solenoid	Demand Speed Fan	5 ± 0.3
333-8242	Solenoid	Implement Pilot Supply	33.75 ± 1.68
328-4314	Solenoid	Dump Anti-Drift Lower Anti-Drift Ride Control Rod End Check	33.8
239-1134	Solenoid	Ether Aid	20
251-3268	Solenoid	Fan Block Ride Control Balance Ride Control Head End Check Transmission Bypass	33.75 ± 1.68
277-8863	Solenoid	Park Brake	33.75 ± 1.68

* At room temperature unless otherwise noted.

UENR5411-02 VOL 1 of 2

42 Page, (Dimensions: 56 inches x 35 inches)

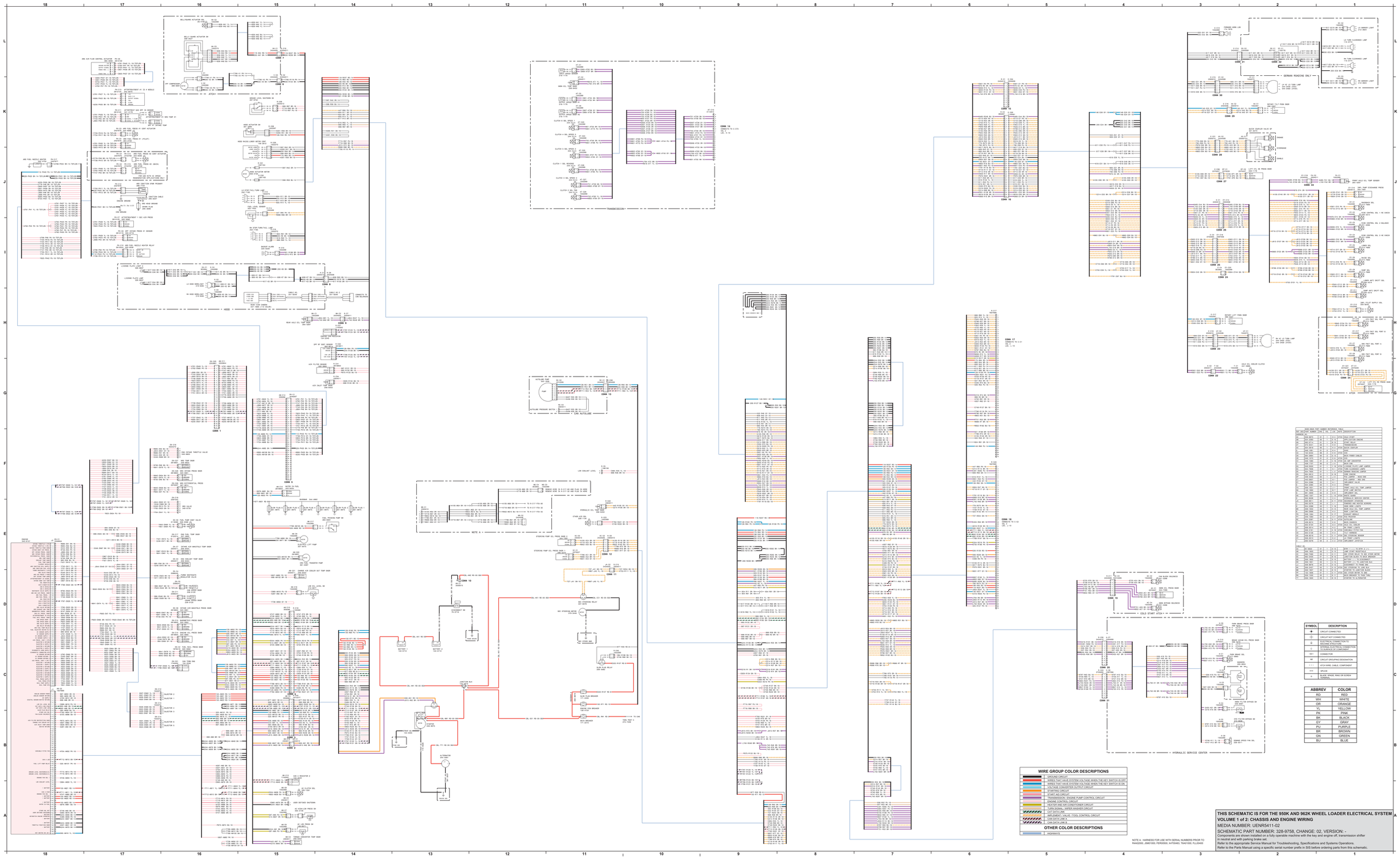

HIGH SEAS PART NUMBER REFERENCE TABLE					
REF DES	PART NO.	QTY	L.OC	W.OC	DESCRIPTION
1W	3W0-9674	20	0.0	0.0	4/0GA WIRE STRIPE
2W	3W0-9675	20	0.0	0.0	4/0GA WIRE STRIPE
3W	3W0-9676	20	0.0	0.0	4/0GA WIRE STRIPE
4W	3W0-9677	20	0.0	0.0	4/0GA WIRE STRIPE
5W	3W0-9678	20	0.0	0.0	4/0GA WIRE STRIPE
6W	3W0-9679	20	0.0	0.0	4/0GA WIRE STRIPE
7W	3W0-9680	20	0.0	0.0	4/0GA WIRE STRIPE
8W	3W0-9681	20	0.0	0.0	4/0GA WIRE STRIPE
9W	3W0-9682	20	0.0	0.0	4/0GA WIRE STRIPE
10W	3W0-9683	20	0.0	0.0	4/0GA WIRE STRIPE
11W	3W0-9684	20	0.0	0.0	4/0GA WIRE STRIPE
12W	3W0-9685	20	0.0	0.0	4/0GA WIRE STRIPE
13W	3W0-9686	20	0.0	0.0	4/0GA WIRE STRIPE
14W	3W0-9687	20	0.0	0.0	4/0GA WIRE STRIPE
15W	3W0-9688	20	0.0	0.0	4/0GA WIRE STRIPE
16W	3W0-9689	20	0.0	0.0	4/0GA WIRE STRIPE
17W	3W0-9690	20	0.0	0.0	4/0GA WIRE STRIPE
18W	3W0-9691	20	0.0	0.0	4/0GA WIRE STRIPE
19W	3W0-9692	20	0.0	0.0	4/0GA WIRE STRIPE
20W	3W0-9693	20	0.0	0.0	4/0GA WIRE STRIPE
21W	3W0-9694	20	0.0	0.0	4/0GA WIRE STRIPE
22W	3W0-9695	20	0.0	0.0	4/0GA WIRE STRIPE
23W	3W0-9696	20	0.0	0.0	4/0GA WIRE STRIPE
24W	3W0-9697	20	0.0	0.0	4/0GA WIRE STRIPE
25W	3W0-9698	20	0.0	0.0	4/0GA WIRE STRIPE
26W	3W0-9699	20	0.0	0.0	4/0GA WIRE STRIPE
27W	3W0-9700	20	0.0	0.0	4/0GA WIRE STRIPE
28W	3W0-9701	20	0.0	0.0	4/0GA WIRE STRIPE
29W	3W0-9702	20	0.0	0.0	4/0GA WIRE STRIPE
30W	3W0-9703	20	0.0	0.0	4/0GA WIRE STRIPE
31W	3W0-9704	20	0.0	0.0	4/0GA WIRE STRIPE
32W	3W0-9705	20	0.0	0.0	4/0GA WIRE STRIPE
33W	3W0-9706	20	0.0	0.0	4/0GA WIRE STRIPE
34W	3W0-9707	20	0.0	0.0	4/0GA WIRE STRIPE
35W	3W0-9708	20	0.0	0.0	4/0GA WIRE STRIPE
36W	3W0-9709	20	0.0	0.0	4/0GA WIRE STRIPE
37W	3W0-9710	20	0.0	0.0	4/0GA WIRE STRIPE
38W	3W0-9711	20	0.0	0.0	4/0GA WIRE STRIPE
39W	3W0-9712	20	0.0	0.0	4/0GA WIRE STRIPE
40W	3W0-9713	20	0.0	0.0	4/0GA WIRE STRIPE
41W	3W0-9714	20	0.0	0.0	4/0GA WIRE STRIPE
42W	3W0-9715	20	0.0	0.0	4/0GA WIRE STRIPE
43W	3W0-9716	20	0.0	0.0	4/0GA WIRE STRIPE
44W	3W0-9717	20	0.0	0.0	4/0GA WIRE STRIPE
45W	3W0-9718	20	0.0	0.0	4/0GA WIRE STRIPE
46W	3W0-9719	20	0.0	0.0	4/0GA WIRE STRIPE
47W	3W0-9720	20	0.0	0.0	4/0GA WIRE STRIPE
48W	3W0-9721	20	0.0	0.0	4/0GA WIRE STRIPE
49W	3W0-9722	20	0.0	0.0	4/0GA WIRE STRIPE
50W	3W0-9723	20	0.0	0.0	4/0GA WIRE STRIPE
51W	3W0-9724	20	0.0	0.0	4/0GA WIRE STRIPE
52W	3W0-9725	20	0.0	0.0	4/0GA WIRE STRIPE
53W	3W0-9726	20	0.0	0.0	4/0GA WIRE STRIPE
54W	3W0-9727	20	0.0	0.0	4/0GA WIRE STRIPE
55W	3W0-9728	20	0.0	0.0	4/0GA WIRE STRIPE
56W	3W0-9729	20	0.0	0.0	4/0GA WIRE STRIPE
57W	3W0-9730	20	0.0	0.0	4/0GA WIRE STRIPE
58W	3W0-9731	20	0.0	0.0	4/0GA WIRE STRIPE
59W	3W0-9732	20	0.0	0.0	4/0GA WIRE STRIPE
60W	3W0-9733	20	0.0	0.0	4/0GA WIRE STRIPE
61W	3W0-9734	20	0.0	0.0	4/0GA WIRE STRIPE
62W	3W0-9735	20	0.0	0.0	4/0GA WIRE STRIPE
63W	3W0-9736	20	0.0	0.0	4/0GA WIRE STRIPE
64W	3W0-9737	20	0.0	0.0	4/0GA WIRE STRIPE
65W	3W0-9738	20	0.0	0.0	4/0GA WIRE STRIPE
66W	3W0-9739	20	0.0	0.0	4/0GA WIRE STRIPE
67W	3W0-9740	20	0.0	0.0	4/0GA WIRE STRIPE
68W	3W0-9741	20	0.0	0.0	4/0GA WIRE STRIPE
69W	3W0-9742	20	0.0	0.0	4/0GA WIRE STRIPE
70W	3W0-9743	20	0.0	0.0	4/0GA WIRE STRIPE
71W	3W0-9744	20	0.0	0.0	4/0GA WIRE STRIPE
72W	3W0-9745	20	0.0	0.0	4/0GA WIRE STRIPE
73W	3W0-9746	20	0.0	0.0	4/0GA WIRE STRIPE
74W	3W0-9747	20	0.0	0.0	4/0GA WIRE STRIPE
75W	3W0-9748	20	0.0	0.0	4/0GA WIRE STRIPE
76W	3W0-9749	20	0.0	0.0	4/0GA WIRE STRIPE
77W	3W0-9750	20	0.0	0.0	4/0GA WIRE STRIPE
78W	3W0-9751	20	0.0	0.0	4/0GA WIRE STRIPE
79W	3W0-9752	20	0.0	0.0	4/0GA WIRE STRIPE
80W	3W0-9753	20	0.0	0.0	4/0GA WIRE STRIPE
81W	3W0-9754	20	0.0	0.0	4/0GA WIRE STRIPE
82W	3W0-9755	20	0.0	0.0	4/0GA WIRE STRIPE
83W	3W0-9756	20	0.0	0.0	4/0GA WIRE STRIPE
84W	3W0-9757	20	0.0	0.0	4/0GA WIRE STRIPE
85W	3W0-9758	20	0.0	0.0	4/0GA WIRE STRIPE
86W	3W0-9759	20	0.0	0.0	4/0GA WIRE STRIPE
87W	3W0-9760	20	0.0	0.0	4/0GA WIRE STRIPE
88W	3W0-9761	20	0.0	0.0	4/0GA WIRE STRIPE
89W	3W0-9762	20	0.0	0.0	4/0GA WIRE STRIPE
90W	3W0-9763	20	0.0	0.0	4/0GA WIRE STRIPE
91W	3W0-9764	20	0.0	0.0	4/0GA WIRE STRIPE
92W	3W0-9765	20	0.0	0.0	4/0GA WIRE STRIPE
93W	3W0-9766	20	0.0	0.0	4/0GA WIRE STRIPE
94W	3W0-9767	20	0.0	0.0	4/0GA WIRE STRIPE
95W	3W0-9768	20	0.0	0.0	4/0GA WIRE STRIPE
96W	3W0-9769	20	0.0	0.0	4/0GA WIRE STRIPE
97W	3W0-9770	20	0.0	0.0	4/0GA WIRE STRIPE
98W	3W0-9771	20	0.0	0.0	4/0GA WIRE STRIPE
99W	3W0-9772	20	0.0	0.0	4/0GA WIRE STRIPE
100W	3W0-9773	20	0.0	0.0	4/0GA WIRE STRIPE
101W	3W0-9774	20	0.0	0.0	4/0GA WIRE STRIPE
102W	3W0-9775	20	0.0	0.0	4/0GA WIRE STRIPE
103W	3W0-9776	20	0.0	0.0	4/0GA WIRE STRIPE
104W	3W0-9777	20	0.0	0.0	4/0GA WIRE STRIPE
105W	3W0-9778	20	0.0	0.0	4/0GA WIRE STRIPE
106W	3W0-9779	20	0.0	0.0	4/0GA WIRE STRIPE
107W	3W0-9780	20	0.0	0.0	4/0GA WIRE STRIPE
108W	3W0-9781	20	0.0	0.0	4/0GA WIRE STRIPE
109W	3W0-9782	20	0.0	0.0	4/0GA WIRE STRIPE
110W	3W0-9783	20	0.0	0.0	4/0GA WIRE STRIPE
111W	3W0-9784	20	0.0	0.0	4/0GA WIRE STRIPE
112W	3W0-9785	20	0.0	0.0	4/0GA WIRE STRIPE
113W	3W0-9786	20	0.0	0.0	4/0GA WIRE STRIPE
114W	3W0-9787	20	0.0	0.0	4/0GA WIRE STRIPE
115W	3W0-9788	20	0.0	0.0	4/0GA WIRE STRIPE
116W	3W0-9789	20	0.0	0.0	4/0GA WIRE STRIPE
117W	3W0-9790	20	0.0	0.0	4/0GA WIRE STRIPE
118W	3W0-9791	20	0.0	0.0	4/0GA WIRE STRIPE
119W	3W0-9792	20	0.0	0.0	4/0GA WIRE STRIPE
120W	3W0-9793	20	0.0	0.0	4/0GA WIRE STRIPE
121W	3W0-9794	20	0.0	0.0	4/0GA WIRE STRIPE
122W	3W0-9795	20	0.0	0.0	4/0GA WIRE STRIPE
123W	3W0-9796	20	0.0	0.0	4/0GA WIRE STRIPE
124W	3W0-9797	20	0.0	0.0	4/0GA WIRE STRIPE
125W	3W0-9798	20	0.0	0.0	4/0GA WIRE STRIPE
126W	3W0-9799	20	0.0	0.0	4/0GA WIRE STRIPE
127W	3W0-9800	20	0.0	0.0	4/0GA WIRE STRIPE
128W	3W0-9801	20	0.0	0.0	4/0GA WIRE STRIPE
129W	3W0-9802	20	0.0	0.0	4/0GA WIRE STRIPE
130W	3W0-9803	20	0.0	0.0	4/0GA WIRE STRIPE
131W	3W0-9804	20	0.0	0.0	4/0GA WIRE STRIPE
132W	3W0-9805	20	0.0	0.0	4/0GA WIRE STRIPE
133W	3W0-9806	20	0.0	0.0	4/0GA WIRE STRIPE
134W	3W0-9807	20	0.0	0.0	4/0GA WIRE STRIPE
135W	3W0-9808	20	0.0	0.0	4/0GA WIRE STRIPE
136W	3W0-9809	20	0.0	0.0	4/0GA WIRE STRIPE
137W	3W0-9810	20	0.0	0.0	4/0GA WIRE STRIPE
138W	3W0-9811	20	0.0	0.0	4/0GA WIRE STRIPE
139W	3W0-9812	20	0.0	0.0	4/0GA WIRE STRIPE
140W	3W0-9813	20	0.0	0.0	4/0GA WIRE STRIPE
141W	3W0-9814	20	0.0	0.0	4/0GA WIRE STRIPE
142W	3W0-9815	20	0.0	0.0	4/0GA WIRE STRIPE
143W	3W0-9816	20	0.0	0.0	4/0GA WIRE STRIPE
144W	3W0-9817	20	0.0	0.0	4/0GA WIRE STRIPE
145W	3W0-9818	20	0.0	0.0	4/0GA WIRE STRIPE
146W	3W0-9819	20	0.0	0.0	4/0GA WIRE STRIPE
147W	3W0-9820	20	0.0	0.0	4/0GA WIRE STRIPE
148W	3W0-9821	20	0.0	0.0	4/0GA WIRE STRIPE
149W	3W0-9822	20	0.0	0.0	4/0GA WIRE STRIPE
150W	3W0-9823	20	0.0	0.0	4/0GA WIRE STRIPE
151W	3W0-9824	20	0.0	0.0	4/0GA WIRE STRIPE
152W	3W0-9825	20	0.0	0.0	4/0GA WIRE STRIPE
153W	3W0-9826	20	0.0	0.0	4/0GA WIRE STRIPE
154W	3W0-9827	20	0.0	0.0	4/0GA WIRE STRIPE
155W	3W0-9828	20	0.0	0.0	4/0GA WIRE STRIPE
156W	3W0-9829	20	0.0	0.0	4/0GA WIRE STRIPE
157W	3W0-9830	20	0.0	0.0	4/0GA WIRE STRIPE
158W	3W0-9831	20	0.0	0.0	4/0GA WIRE STRIPE
159W	3W0-9832	20	0.0	0.0	4/0GA WIRE STRIPE
160W	3W0-9833	20	0.0	0.0	4/0GA WIRE STRIPE
161W	3W0-9834	20	0.0	0.0	4/0GA WIRE STRIPE
162W	3W0-9835	20	0.0	0.0	4/0GA WIRE STRIPE
163W	3W0-9836	20	0.0	0.0	4/0GA WIRE STRIPE
164W	3W0-9837	20	0.0	0.0	4/0GA WIRE STRIPE
165W	3W0-9838	20	0.0	0.0	4/0GA WIRE STRIPE
166W	3W0-9839	20	0.0	0.0	4/0GA WIRE STRIPE
167W	3W0-9840	20	0.0	0.0	4/0GA WIRE STRIPE
168W	3W0-9841	20	0.0	0.0	4/0GA WIRE STRIPE
169W	3W0-9842	20	0.0	0.0	4/0GA WIRE STRIPE
170W	3W0-9843	20	0.0	0.0	4/0GA WIRE STRIPE
171W	3W0-9844	20	0.0	0.0	4/0GA WIRE STRIPE
172W	3W0-9845	20	0.0	0.0	4/0GA WIRE STRIPE
173W	3W0-9846	20	0.0	0.0	4/0GA WIRE STRIPE
174W	3W0-9847	20	0.0	0.0	4/0GA WIRE STRIPE
175W	3W0-9848	20	0.0	0.0	4/0GA WIRE STRIPE
176W	3W0-9849	20	0.0	0.0	4/0GA WIRE STRIPE
177W	3W0-9850	20	0.0	0.0	4/0GA WIRE STRIPE
178W	3W0-9851	20	0.0	0.0	4/0GA WIRE STRIPE
179W	3W0-9852	20	0.0	0.0	4/0GA WIRE STRIPE
180W	3W0-9853	20	0.0	0.0	4/0GA WIRE STRIPE
181W	3W0-9854	20	0.0	0.0	4/0GA WIRE STRIPE
182W	3W0-9855	20	0.0	0.0	4/0GA WIRE STRIPE
183W	3W0-9856	20	0.0	0.0	4/0GA WIRE STRIPE
184W	3W0-9857	20	0.0	0.0	4/0GA WIRE STRIPE
185W	3W0-9858	20	0.0	0.0	4/0GA WIRE STRIPE
186W	3W0-9859	20	0.0	0.0	4/0GA WIRE STRIPE
187W	3W0-9860	20	0.0	0.0	4/0GA WIRE STRIPE
188W	3W0-9861	20	0.0	0.0	4/0GA WIRE STRIPE
189W	3W0-9862	20	0.0	0.0	4/0GA WIRE STRIPE
190W	3W0-9863	20	0.0	0.0	4/0GA WIRE STRIPE
191W	3W0-9864	20	0.0	0.0	4/0GA WIRE STRIPE
192W	3W0-9865	20	0.0	0.0	4/0GA WIRE STRIPE
193W	3W0-9866	20	0.0	0.0	4/0GA WIRE STRIPE
194W	3W0-9867	20	0.0	0.0	4/0GA WIRE STRIPE
195W	3W0-9868	20	0.0	0.0	4/0GA WIRE STRIPE
196W	3W0-9869	20	0.0	0.0	4/0GA WIRE STRIPE
197W	3W0-9870	20	0.0	0.0	4/0GA WIRE STRIPE
198W	3W0-9871	20	0.0	0.0	4/0GA WIRE STRIPE
199W	3W0-9872	20	0.0	0.0	4/0GA WIRE STRIPE
200W	3W0-9873	20	0.0	0.0	4/0GA WIRE STRIPE
201W	3W0-9874	20	0.0	0.0	4/0GA WIRE STRIPE
202W	3W0-9875	20	0.0	0.0	4/0GA WIRE STRIPE
203W	3W0-9876	20	0.0	0.0	4/0GA WIRE STRIPE
204W	3W0-9877	20	0.0	0.0	4/0GA WIRE STRIPE
205W	3W0-9878	20	0.0	0.0	4/0GA WIRE STRIPE
206W	3W0-9879	20	0.0	0.0	4/0GA WIRE STRIPE
207W	3W0-9880	20	0.0	0.0	4/0GA WIRE STRIPE
208W	3W0-9881	20	0.0	0.0	4/0GA WIRE STRIPE
209W	3W0-9882	20	0.0	0.0	4/0GA WIRE STRIPE
210W	3W0-9883	20	0.0	0.0	4/0GA WIRE STRIPE
211W	3W0-9884	20	0.0	0.0	4/0GA WIRE STRIPE
212W	3W0-9885	20	0.0	0.0	4/0GA WIRE STRIPE
213W	3W0-9886	20	0.0	0.0	4/0GA WIRE STRIPE
214W	3W0-9887	20	0.0	0.0	4/0GA WIRE STRIPE
215W	3W0-9888	20	0.0	0.0	4/0GA WIRE STRIPE
216W	3W0-9889	20	0.0	0.0	4/0GA WIRE STRIPE
217W	3W0-9890	20	0.0	0.0	4/0GA WIRE STRIPE
218W	3W0-9891	20	0.0	0.0	4/0GA WIRE STRIPE
219W	3W0-9892	20	0.0	0.0	4/0GA WIRE STRIPE
220W	3W0-9893	20	0.0	0.0	4/0GA WIRE STRIPE
221W	3W0-9894	20	0.0	0.0	4/0GA WIRE STRIPE
222W	3W0-9895	20	0.0	0.0	4/0GA WIRE STRIPE
223W	3W0-9896	20	0.0	0.0	4/0GA WIRE STRIPE
224W	3W0-9897	20	0.0	0.0	4/0GA WIRE STRIPE
225W	3W0-9898	20	0.0	0.0	4/0GA WIRE STRIPE
226W	3W0-9899	20	0.0	0.0	4/0GA WIRE STRIPE
227W	3W0-9900	20	0.0	0.0	4/0GA WIRE STRIPE
228W	3W0-9901	20	0.0	0.0	4/0GA WIRE STRIPE
229W	3W0-9902	20	0.0	0.0	4/0GA WIRE STRIPE
230W	3W0-9903	20	0.0	0.0	4/0GA WIRE STRIPE
231W	3W0-9904	20	0.0	0.0	4/0GA WIRE STRIPE
232W	3W0-9905	20	0.0	0.0	4/0GA WIRE STRIPE
233W	3W0-9906	20	0.0	0.0	4/0GA WIRE STRIPE
234W	3W0-9907	20	0.0	0.0	4/0GA WIRE STRIPE
235W	3W0-9908	20	0.0	0.0	4/0GA WIRE STRIPE
236W	3W0-9909	20	0.0	0.0	4/0GA WIRE STRIPE
237W	3W0-9910	20	0.0	0.0	4/0GA WIRE STRIPE
238W	3W0-9911	20	0.0	0.0	4/0GA WIRE STRIPE
239W	3W0-9912	20	0.0	0.0	4/0GA WIRE STRIPE
240W	3W0-9913	20	0.0	0.0	4/0GA WIRE STRIPE
241W	3W0-9914	20	0.0	0.0	4/0GA WIRE STRIPE
242W	3W0-9915	20	0.0	0.0	4/0GA WIRE STRIPE
243W	3W0-9916	20	0.0	0.0	4/0GA WIRE STRIPE
244W	3W0-9917	20	0.0	0.0	4/0GA WIRE STRIPE
245W	3W0-9918	20	0.0	0.0	4/0GA WIRE STRIPE
246W	3W0-9919	20	0.0	0.0	4/0GA WIRE STRIPE
247W	3W0-9920	20	0.0	0.0	4/0GA WIRE STRIPE
248W	3W0-9921	20	0.0	0.0	4/0GA WIRE STRIPE
249W	3W0-9922	20	0.0	0.0	4/0GA WIRE STRIPE
250W	3W0-9923	20	0.0	0.0	4/0GA WIRE STRIPE
251W	3W0-9924	20	0.0	0.0	4/0GA WIRE STRIPE
252W	3W0-9925	20	0.0	0.0	4/0GA WIRE STRIPE
253W	3W0-9926	20	0.0	0.0	4/0GA WIRE STRIPE
254W	3W0-9927	20	0.0	0.0	4/0GA WIRE STRIPE
255W	3W0-9928	20	0.0	0.0	4/0GA WIRE STRIPE
256W	3W0-9929	20	0.0	0.0	4/0GA WIRE STRIPE
257W	3W0-9930	20	0.0	0.0	4/0GA WIRE STRIPE
258W	3W0-9931	20	0.0	0.0	4/0GA WIRE STRIPE
259W	3W0-9932	20	0.0	0.0	4/0GA WIRE STRIPE
260W	3W0-9933	20	0.0	0.0	4/0GA WIRE STRIPE
261W	3W0-9934	20	0.0	0.0	4/0GA WIRE STRIPE
262W	3W0-9935	20	0.0	0.0	4/0GA WIRE STRIPE
263W	3W0-9936	20	0.0	0.0	4/0GA WIRE STRIPE
264W	3W0-9937	20	0.0	0.0	4/0GA WIRE STRIPE
265W	3W0-9938	20	0.0	0.0	4/0GA WIRE STRIPE
266W	3W0-9939	20	0.0	0.0	4/0GA WIRE STRIPE
267W	3W0-9940	20	0.0	0.0	4/0GA WIRE STRIPE
268W	3W0-9941	20	0.0	0.0	4/0GA WIRE STRIPE
269W	3W0-9942	20	0.0	0.0	4/0GA WIRE STRIPE
270W	3W0-9943	20	0.0	0.0	4/0GA WIRE STRIPE
271W	3W0-9944	20	0.0	0.0	4/0GA WIRE STRIPE
272W	3W0-9945	20	0.0	0.0	4/0GA WIRE STRIPE
273W	3W0-9946	20	0.0	0.0	4/0GA WIRE STRIPE
274W	3W0-9947	20	0.0	0.0	4/0GA WIRE STRIPE
275W	3W0-9948	20	0.0	0.0	4/0GA WIRE STRIPE
276W	3W0-9949	20	0.0	0.0	4/0GA WIRE STRIPE
277W	3W0-9950	20	0.0	0.0	4/0GA WIRE STRIPE
278W	3W0-9951	20	0.0	0.0	4/0GA WIRE STRIPE
279W	3W0-9952	20	0.0	0.0	4/0GA WIRE STRIPE
280W	3W0-9953	20	0.0	0.0	4/0GA WIRE STRIPE
281W	3W0-9954	20	0.0	0.0	4/0GA WIRE STRIPE
282W	3W0-9955	20	0.0	0.0	4/0GA WIRE STRIPE
283W	3W0-9956	20	0.0	0.0	4/0GA WIRE STRIPE
284W	3W0-9957	20	0.0	0.0	4/0GA WIRE STRIPE
285W	3W0-9958	20	0.0	0.0	4/0GA WIRE STRIPE
286W	3W0-9959	20	0.0	0.0	4/0GA WIRE STRIPE
287W	3W0-9960	20	0.0	0.0	4/0GA WIRE STRIPE
288W	3W0-9961	20	0.0	0.0	4/0GA WIRE STRIPE
289W	3W0-9962	20	0.0	0.0	4/0GA WIRE STRIPE
290W	3W0-9963	20	0.0	0.0	4/0GA WIRE STRIPE
291W	3W0-9964	20	0.0	0.0	4/0GA WIRE STRIPE
292W	3W0-9965	20	0.0	0.0	4/0GA WIRE STRIPE
293W	3W0-9966	20	0.0	0.0	4/0GA WIRE STRIPE
294W	3W0-9967	20	0.0	0.0	4/0GA WIRE STRIPE
295W	3W0-9968	20	0.0	0.0	4/0GA WIRE STRIPE
296W	3W0-9969	20	0.0	0.0	4/0GA WIRE STRIPE
297W	3W0-9970	20	0.0	0.0	4/0GA WIRE STRIPE
298W	3W0-9971	20	0.0	0.0	4/0GA WIRE STRIPE
299W	3W0-9972	20	0.0	0.0	4/0GA WIRE STRIPE
300W	3W0-9973	20	0.0	0.0	4/0GA WIRE STRIPE
301W	3W0-9974	20	0.0	0.0	4/0GA WIRE STRIPE
302W	3W0-9975	20	0.0	0.0	4/0GA WIRE STRIPE
303W	3W0-9976	20	0.0	0.0	4/0GA WIRE STRIPE
304W	3W0-9977	20	0.0	0.0	4/0GA WIRE STRIPE
305W	3W0-9978	20	0.0	0.0	4/0GA WIRE STRIPE
306W	3W0-9979	20	0.0	0.0	4/0GA WIRE STRIPE
307W	3W0-9980	20	0.0	0.0	4/0GA WIRE STRIPE
308W	3W0-9981	20	0.0	0.0	4/0GA WIRE STRIPE
309W	3W0-9982	20	0.0	0.0	4/0GA WIRE STRIPE
310W	3W0-9983	20	0.0	0.0	4/0GA WIRE STRIPE
311W	3W0-9984	20	0.0	0.0	4/0GA WIRE STRIPE
312W	3W0-9985	20	0.0	0.0	4/0GA WIRE STRIPE
313W	3W0-9986	20	0.0	0.0	4/0GA WIRE STRIPE
314W	3W0-9987	20	0.0	0.0	4/0GA WIRE STRIPE
315W	3W0-9988	20	0.0	0.0	4/0GA WIRE STRIPE
316W	3W0-9989	20	0.0	0.0	4/0GA WIRE STRIPE
317W	3W0-9990	20	0.0	0.0	4/0GA WIRE STRIPE
318W	3W0-9991	20	0.0	0.0	4/0GA WIRE STRIPE
319W	3W0-9992	20	0.0	0.0	4/0GA WIRE STRIPE
320W	3W0-9993	20	0.0	0.0	4/0GA WIRE STRIPE
321W	3W0-9994	20	0.0	0.0	4/0GA WIRE STRIPE
322W	3W0-9995	20	0.0	0.0	4/0GA WIRE STRIPE
323W	3W0-9996	20	0.0	0.0	4/0GA WIRE STRIPE
324W	3W0-9997	20	0.0	0.0	4/0GA WIRE STRIPE
325W	3W0-9998	20	0.0	0.0	4/0GA WIRE STRIPE
326W	3W0-9999	20	0.0	0.0	4/0GA WIRE STRIPE

SYMBOL	DESCRIPTION
⊕	CIRCUIT CONNECTED
⊕	CIRCUIT NOT CONNECTED
⊕	CIRCUIT CONNECTED TO MACHINE STRUCTURE
⊕	CIRCUIT CONNECTED TO ELECTRICAL CONNECTOR
⊕	CONNECTOR
HI	CIRCUIT GROUPING DESIGNATION
⊕	STICK WIRE, CABLE, COMPONENT
⊕	SPLICE
⊕	BLADE SPADE, RING OR SCREW TERMINAL

ABBREV	COLOR
RD	RED
WH	WHITE
OR	ORANGE
YL	YELLOW
PK	PINK
BK	BLACK
GY	GRAY
PU	PURPLE
BR	BROWN
GN	GREEN
BU	BLUE

WIRE GROUP COLOR DESCRIPTIONS

- DEDICATED CIRCUIT
- WIRES THAT HAVE SYSTEM VOLTAGE WHEN THE KEY SWITCH IS OFF
- WIRES THAT HAV

CATERPILLAR®

UENR5411-02
September 2014

Schematic

950K and 962K Wheel Loader Electrical System

950K:	962K:
R4A2000-UP	T6A1000-UP
J5M1000-UP	FLL400-UP
FER500-UP	X4T483-UP

Volume 2 of 2: Cab Wiring

© 2014 Caterpillar, All Rights Reserved

Printed in U.S.A.

UENR5411-02 VOL 2 of 2
42 Page, (Dimensions: 56 inches x 35 inches)

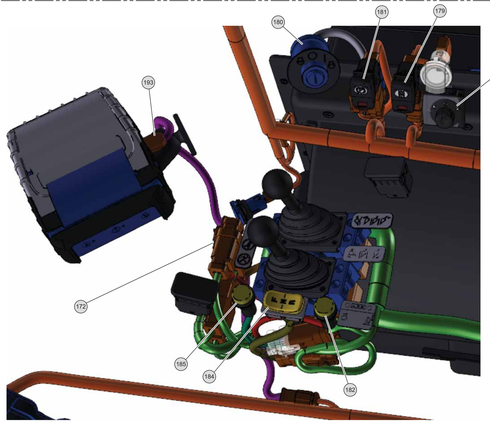

JOYSTICK

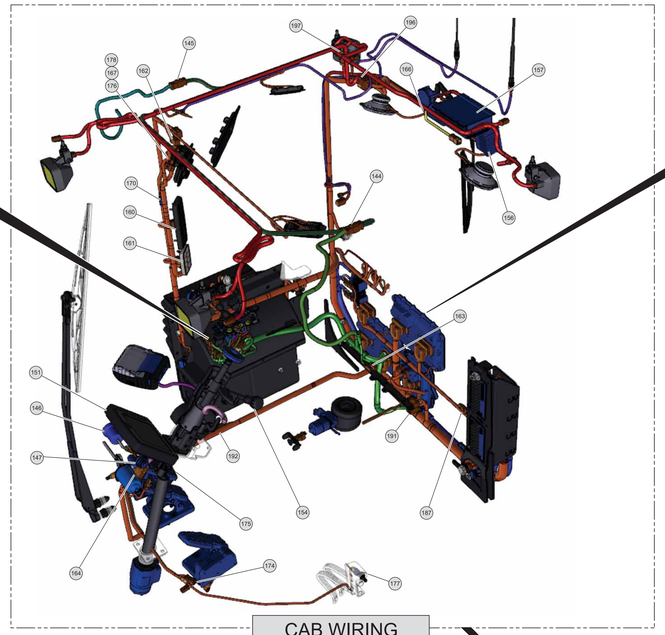

CAB WIRING

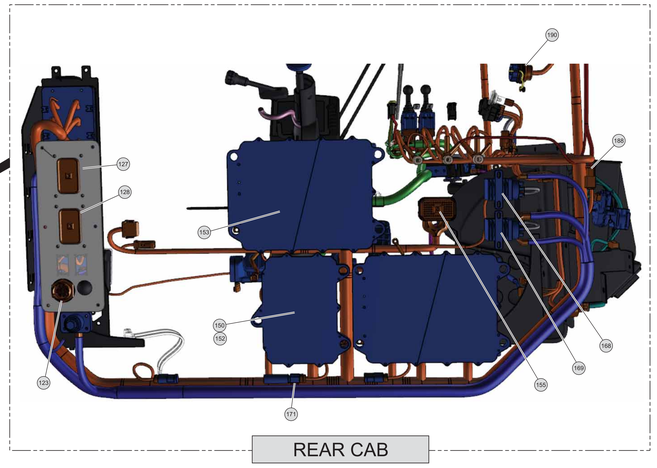

REAR CAB

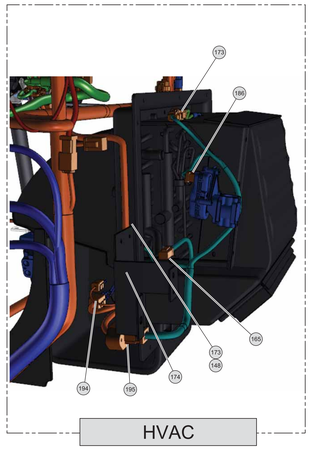

HVAC

Volume 2 - Connector Location		
Connector Number	Schematic Location	Machine Location
CONN 14	H-10	123
CONN 17	L-10	127
CONN 18	J-10	128
CONN 35 3rd Party VIMS Radio Atch.	D-16	187
CONN 36	C-16	188
CONN 37 VIMS Service Port	F-14	189
CONN 38	E-10	184
CONN 39 ET Service Connector	E-10	180
CONN 40	D-4, D-10	181
CONN 41	C-4, C-10	191
CONN 42	E-9	192
CONN 43	B-7	174
CONN 44	C-7	192
CONN 45 PC3 Printer	C-8	193
CONN 46	I-5	194
CONN 47	K-5	195
CONN 48	L-5	196
CONN 49	L-2	197

The connectors shown in this chart are for harness to harness connectors. Connectors that join a harness to a component are generally located at or near the component. See the Component Location Chart.

Volume 2 - Component Location					
Component	Schematic Location	Machine Location	Component	Schematic Location	Machine Location
Actuator - LH Mirror	L-1	144	Relay - High Beams	I-13	159
Actuator - RH Mirror	L-1	145	Relay - Left Hand Tail Lamps	I-13	159
Alarm - Action	D-16	146	Relay - Low Beams	I-13	159
Alarm - Machine Feature	D-16	147	Relay - Low Current Mode	G-14	168
Blower As -	K-4	148	Relay - Main	G-14	169
Coil As - MSS Exciter	D-5	149	Relay - Rear HID Lamps	L-13	158
Control - Flasher	I-16	150	Relay - Rear Lamps	K-13	158
Control - Instrument Cluster	A-7	151	Relay - Rear Wiper High / Low	K-14	158
Control - Relay Driver Module	H-16	152	Relay - Rear Wiper On / Off	K-14	158
Control - Transmission	K-16	153	Relay - Right Hand Tail Lamps	I-13	159
Control - Transmission Gear Selector	L-13	154	Relay - VPP	L-13	158
Control - VIMS Main	P-16	155	Resistor - CAN A	C-8	170
Converter - 10A	I-5	156	Resistor - HVAC Pull Up	F-18	171
Converter - 20A	C-17	157	Sensor - 3rd Lever Position	B-9	172
Fuse Block - Switched	J-14	158	Sensor - 4th Function Thumbroller	B-9	172
Fuse Block - Unswitched	H-14	159	Sensor - HVAC Evaporator Thermostat	K-4	173
Keypad (10)	C-5	160	Sensor - Left Pedal Position	B-7	174
Keypad (8)	D-5	161	Sensor - Lift Lever Position	C-9	172
Monitor - Rear Vision	H-5	162	Sensor - Louver Temperature	K-4	173
Motor - Air Seat / Heated Seat	D-9	163	Sensor - Recirc Filter Temperature	K-4	174
Motor - Front Wiper	B-7	164	Sensor - Right Pedal Position	B-7	175
Motor - Precleaner	L-4	165	Sensor - Tilt Lever Position	B-9	172
Motor - Rear Wiper	I-5	166	Switch - ATC/Manual	B-5	176
MSS Key Reader	H-5	149	Switch - Door	F-13	177
Panel - HVAC	B-5	167	Switch - Front/Rear Washer	B-5	178
Panel - Wiper	C-5	167	Switch - Implement Lockout	E-5	179
Relay - Beacon	I-13	159	Switch - Key	D-5	180
Relay - Forward Horn	I-14	159	Switch - Parking Brake	F-5	181
Relay - Front HID Lamps	K-14	158	Switch - PCS Revo / Autodig Trigger	E-9	182
Relay - Front Lamps	K-13	158	Switch - Powered Mirrors	E-5	183
Relay - Front Wiper High / Low	L-14	158	Switch - Remote FNR	C-9	184
Relay - Front Wiper On / Off	L-14	158	Switch - Strip Lamp	B-8	174
Relay - Fuel Lift Pump	H-13	159	Switch - Transmission Downshift / Horn	D-9	185
Relay - Fuel Transfer Pump	H-14	159	Switch - Transmission Shifter	E-8	186
Relay - Heated Mirrors	H-13	159	Valve - Water	K-4	186

Always check component part numbers with Parts Manual for your specific machine.

Related Electrical Service Manuals	
Title	Form Number
Engine Control	UENR0635
Transmission Control	KENR5791
Implement Control	KENR5803
VIMS 3G Control	UENR0769

Resistor, Sender and Solenoid Specifications		
Part No.	Component Description	Resistance (Ohms)[1]
134-2540	Resistor: CAN	120 ± 12
226-6462	Resistor: HVAC Pull Up	150 ± 7.5

[1] At room temperature unless otherwise noted.

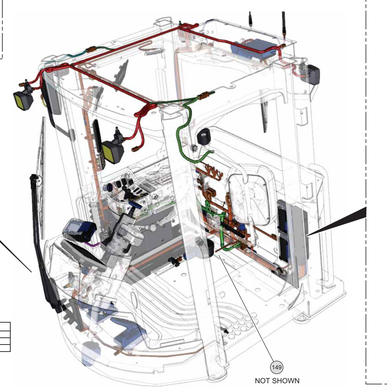

NOT SHOWN

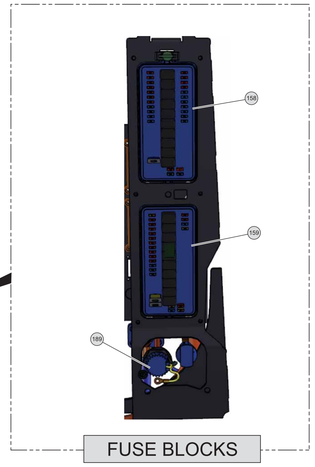

FUSE BLOCKS

Harness And Wire Electrical Schematic Symbols

Symbols

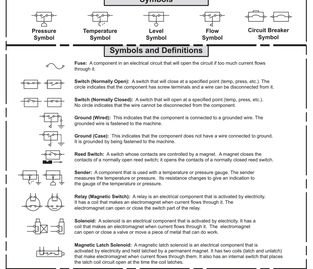

Symbols and Definitions

Fuse: A component in an electrical circuit that will open the circuit if too much current flows through it.

Switch (Normally Open): A switch that will close at a specified point (temp, press, etc.). The circle indicates that the component has screw terminals and a wire can be disconnected from it.

Switch (Normally Closed): A switch that will open at a specified point (temp, press, etc.). No circle indicates that the wire cannot be disconnected from the component.

Ground (Wired): This indicates that the component is connected to a grounded wire. The grounded wire is fastened to the machine.

Ground (Case): This indicates that the component does not have a wire connected to ground. It is grounded by being fastened to the machine.

Reed Switch: A switch whose contacts are controlled by a magnet. A magnet closes the contacts of a normally open reed switch; it opens the contacts of a normally closed reed switch.

Sender: A component that is used with a temperature or pressure gauge. The sender measures the temperature or pressure. Its resistance changes to give an indication to the gauge of the temperature or pressure.

Relay (Magnetic Switch): A relay is an electrical component that is activated by electricity. It has a coil that makes an electromagnet when current flows through it. The electromagnet can open or close the switch part of the relay.

Solenoid: A solenoid is an electrical component that is activated by electricity. It has a coil that makes an electromagnet when current flows through it. The electromagnet can open or close a valve or move a piece of metal that can do work.

Magnetic Latch Solenoid: A magnetic latch solenoid is an electrical component that is activated by electricity and held latched by a permanent magnet. It has two coils (latch and unlatch) that make electromagnet when current flows through them. It also has an internal switch that places the latch coil circuit open at the time the coil latches.

Harness and Wire Symbols

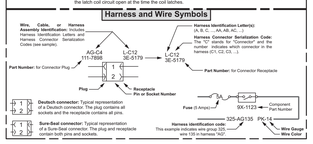

UENR5411-02 VOL 2 of 2

42 Page, (Dimensions: 56 inches x 35 inches)

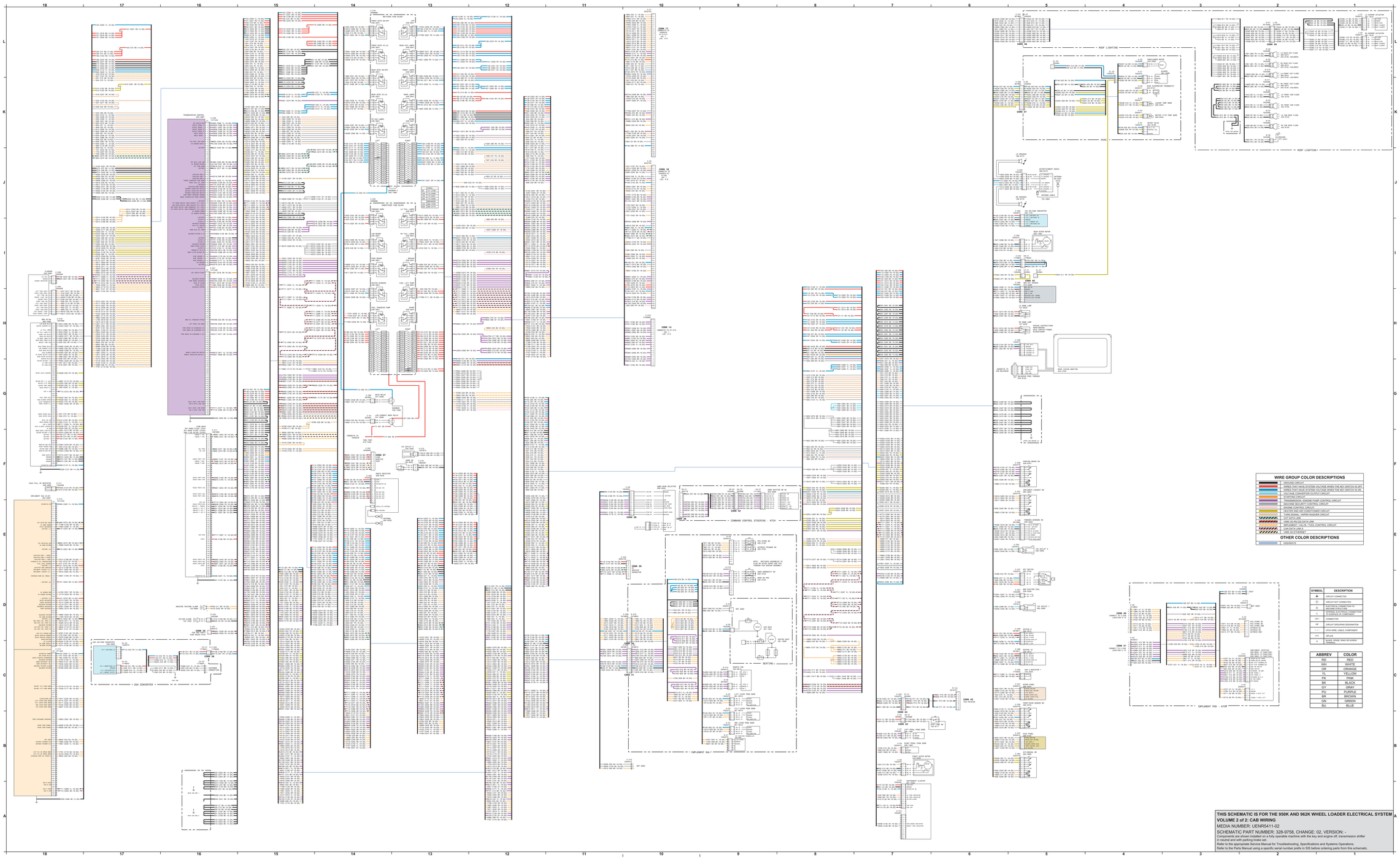

WIRE GROUP COLOR DESCRIPTIONS

- GROUNDED CIRCUIT
- WIRES THAT HAVE SYSTEM VOLTAGE WHEN THE KEY SWITCH IS OFF
- WIRES THAT HAVE SYSTEM VOLTAGE WHEN THE KEY SWITCH IS ON
- VOLTAGE CONVERTER OUTPUT CIRCUIT
- STARTING CIRCUIT
- TRANSMISSION, ENGINE PUMP CONTROL CIRCUIT
- MACHINE SECURITY CONTROL CIRCUIT
- ENGINE CONTROL
- HEATER AND AIR CONDITIONER CIRCUIT
- TURN SIGNAL / WIPER WASHER CIRCUIT
- CAT DATA LINK
- VIMS 3G RS-232 DATA LINK
- VIMS 3G RS-232 DIGITAL TOOL CONTROL CIRCUIT
- CAN DATA LINK A
- VIMS 3G ETHERNET

OTHER COLOR DESCRIPTIONS

- HYDRAULICS

SYMBOL	DESCRIPTION
+	CIRCUIT CONNECTED
+	CIRCUIT NOT CONNECTED
⏚	CHASSIS GROUND (ON TO MACHINE BUILDING)
⏚	CHASSIS GROUND (ON TO INTERNAL ELECTRICAL COMPONENT)
CN1	CONNECTOR
TM	CIRCUIT GROUPING DESIGNATION
- - -	WIRE/CABLE, CABLE COMPONENT
	DEVICE
⊗	SIGNAL WIRES, WIRE ON SLINKY TUBING

ABBREV	COLOR
RD	RED
WH	WHITE
OR	ORANGE
YL	YELLOW
PK	PINK
BK	BLACK
GY	GRAY
PU	PURPLE
BR	BROWN
GN	GREEN
BU	BLUE

THIS SCHEMATIC IS FOR THE 950K AND 962K WHEEL LOADER ELECTRICAL SYSTEM

VOLUME 2 of 2: CAB WIRING

MEDIA NUMBER: UENR5411-02

SCHEMATIC PART NUMBER: 328-9758, CHANGE: 02, VERSION: -

Components are shown installed on a fully operable machine with the key and engine off, transmission shifter in neutral and with parking brake set.

Refer to the appropriate Service Manual for Troubleshooting, Specifications and Systems Operations.

Refer to the Parts Manual using a specific serial number prefix in SIS before ordering parts from this schematic.